CyberPower

YOUR ULTIMATE ALLY IN POWER

# POWER DISTRIBUTION UNITS

15A / 20A / 30A / 32A
SWITCHED / METERED / MONITORED SERIES

# USER MANUAL

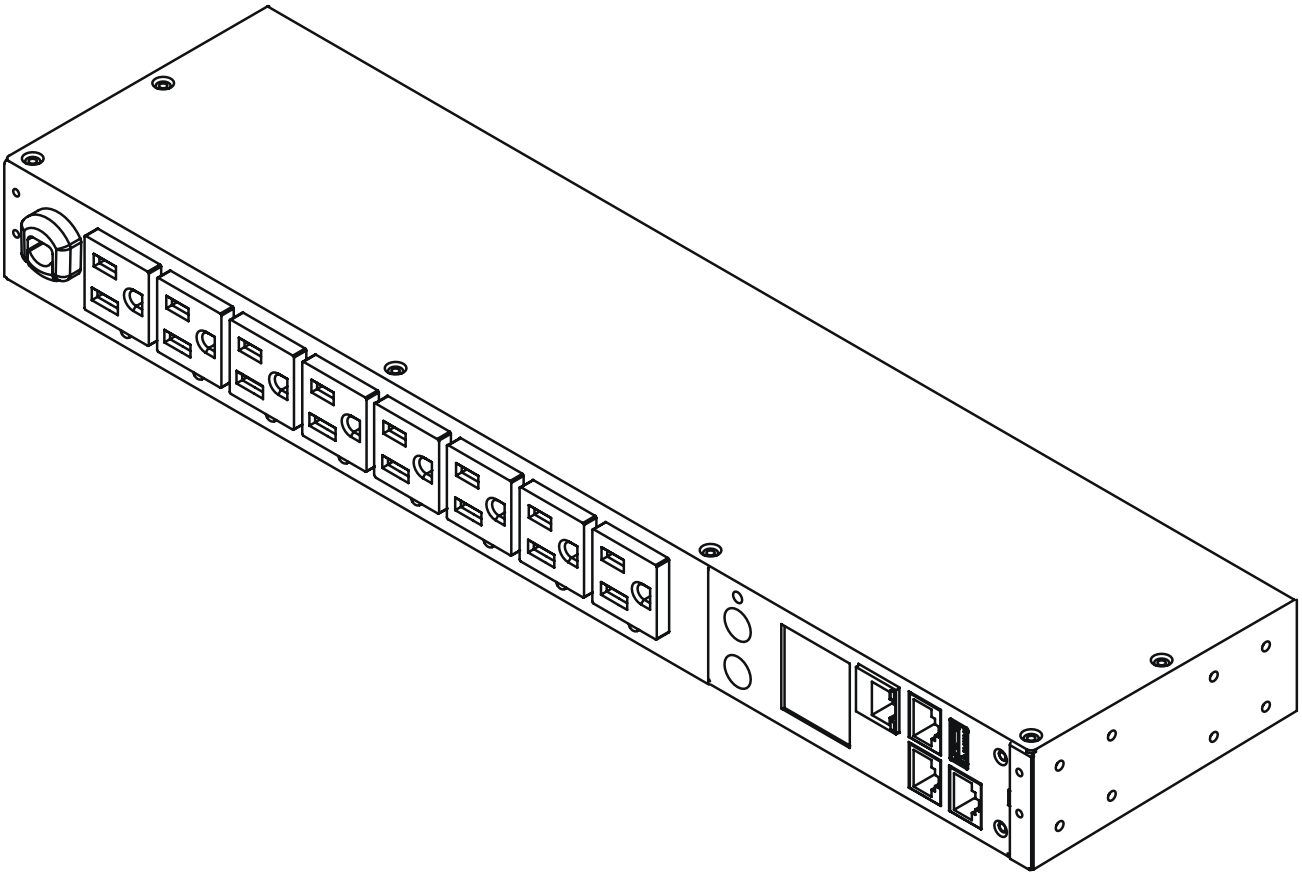

**Cyber Power Systems (USA), Inc.**
4241 12th Avenue East, Suite 400 | Shakopee, MN 55379
**CyberPowerSystems.com**

## TABLE OF CONTENTS


TABLE OF CONTENTS . . . . . 1
MODEL LIST . . . . . 1
SAFETY PRECAUTIONS . . . . . 2
PRÉCAUTIONS DE SÉCURITÉ . . . . . 2
INTRODUCTION . . . . . 3
Package Contents . . . . . 3
PRODUCT FEATURES - 15A MODELS . . . . . 4
TECHNICAL SPECIFICATIONS - 15A MODELS . . . . . 5
PRODUCT FEATURES - 20A MODELS . . . . . 6
TECHNICAL SPECIFICATIONS - 20A MODELS . . . . . 7
PRODUCT FEATURES - 30A MODELS . . . . . 8
TECHNICAL SPECIFICATIONS - 30A MODELS . . . . . 9
PRODUCT FEATURES - 32A MODELS . . . . . 10
TECHNICAL SPECIFICATIONS - 32A MODELS . . . . . 11
INSTALLATION GUIDE . . . . . 12
Installation - 1U Models . . . . . 12
Locking Power Cord - For IEC Type PDU . . . . . 15
Electrical Installation . . . . . 16
Network Installation . . . . . 17
OPERATION . . . . . 18
Remote Management . . . . . 18
Web . . . . . 18
Telnet and SSH . . . . . 18
SNMP . . . . . 18
Local Management . . . . . 18
LCD Operation . . . . . 18
LED Indicators . . . . . 19
Environmental Monitoring (optional) . . . . . 19
Device Reset . . . . . 19
Unattended/Automatic Shutdown . . . . . 19
Firmware Upgrade . . . . . 20
TROUBLESHOOTING . . . . . 22
CONFORMANCE APPROVALS . . . . . 23
FCC Warning . . . . . 23
APPENDIX A - HYPER TERMINAL . . . . . 24
APPENDIX B - POWER DEVICE NETWORK UTILITY 2 . . 25
APPENDIX C - PDU DAISY-CHAIN FUNCTION . . . . . 27
TROUBLESHOOTING . . . . . 29
Appendix D -
RJ45/ DB9 Serial Port Connection Cable Pinout . . . . . 29


## MODEL LIST

**Switched Metered by Outlet Series**

| | | |
|---|---|---|
| PDU81021 | PDU81026 | PDU81326 |
| PDU81022 | PDU81027 | PDU81327 |
| PDU81023 | PDU81028 | PDU81328 |
| PDU81024 | PDU81029 | PDU81329 |
| PDU81025 | PDU81030 | PDU81330 |

**Metered by Outlet Series**

| | | |
|---|---|---|
| PDU71021 | PDU71026 | PDU71326 |
| PDU71022 | PDU71027 | PDU71327 |
| PDU71023 | PDU71028 | PDU71328 |
| PDU71024 | PDU71029 | PDU71329 |
| PDU71025 | PDU71030 | PDU71330 |

**Switched Series**

| | | |
|---|---|---|
| PDU41021 | PDU41026 | PDU41326 |
| PDU41022 | PDU41027 | PDU41327 |
| PDU41023 | PDU41028 | PDU41328 |
| PDU41024 | PDU41029 | PDU41329 |
| PDU41025 | PDU41030 | PDU41330 |

**Monitored Series**

| | | |
|---|---|---|
| PDU31021 | PDU31026 | PDU31326 |
| PDU31022 | PDU31027 | PDU31327 |
| PDU31023 | PDU31028 | PDU31328 |
| PDU31024 | PDU31029 | PDU31329 |
| PDU31025 | PDU31030 | PDU31330 |

## SAFETY PRECAUTIONS

Read the following before installing or operating the Power Distribution Units (PDU):

- Use only the supplied hardware to attach the mounting brackets.
- The PDU must be plugged into a three-wire, grounded outlet on a circuit that is protected by a fuse or circuit breaker.
  For 15A PDU series, please use a 15A circuit protector.
  For 20A PDU series, please use a 20A circuit protector.
  For 30A PDU series, please use a 30A circuit protector.
- Connection to any other type of power outlet may result in a shock hazard.
- Do not use extension cords or adapters with this PDU.
- Never install a PDU or associated wiring or equipment during a lightning storm.
- Ensure that the power cord, plug, and socket are in good condition.
- Straight by means of a power cord connected to a socket-outlet with earthing connection and that for pluggable equipment, the socket-outlet shall be easily accessible.
- Suitable for installation in Information Technology Rooms in accordance with Article 645 of the National Electrical Code and NFPA 75.
- Equipment intended for installation in Restricted Access Location.

| | |
|---|---|
| **WARNING!** | **To prevent the risk of fire or electrocution, this PDU should be installed in a temperature and humidity controlled indoor area free of conductive contaminants. Do not install this PDU where excessive moisture or heat is present.** |

## PRÉCAUTIONS DE SÉCURITÉ

Lisez ce qui suit avant d'installer ou d'utiliser les unités de distribution de l'alimentation (PDU):

- Utilisez uniquement le matériel fourni pour fixer les supports de montage.
- Le PDU doit être branché sur une prise à trois fils mise à la terre sur un circuit protégé par un fusible ou un disjoncteur.
  Pour la série PDU 15A, veuillez utiliser disjondteur de 15A. Pour la série PDU 20A, veuillez utiliser un disjoncteur de 20A. Pour la série PDU 30A, veuillez utiliser un disjoncteur de 30A.
  La connexion à tout autre type de prise de courant peut provoquer un choc électrique.
- N'utilisez pas de rallonges ni d'adaptateurs avec ce PDU.
- N'installez jamais un PDU ni le câblage ou l'équipement associé pendant un orage.
- Assurez-vous que le cordon d'alimentation, la fiche et la prise sont en bon état.
- Pour le PDU avec les cordons d'alimentation d'entrée connectés, la prise doit être installée à proximité de l'équipement et doit être facilement accessible.
- Assurez-vous de débrancher les cordons d'alimentation et toutes les sources d'alimentation avant de tenter de réparer ou de retirer cette unité.
- Pour le dispositif de protection contre les surintensités des équipements, veuillez noter que tous les PDU avec un courant d'entrée supérieur à 20A sont équipés de deux disjoncteurs de dérivation à montage encastré
- Peut être installé dans des salles de matériel de traitement de l'information conformément à l'article 645 du National Electrical Code et à la NFPA 75.
- Équipement destiné à être installé dans un emplacement à accès restreint.

## INTRODUCTION

### Package Contents

- **A** PDU
- **B** Mounting Brackets x 2
- **C** 24 Bracket Mounting Screws (Flat Head M4 x 8)
- **D** 6 (M5 x 12) Rack Mounting Screws and Washers
- **E** Cord Retention Trays x 2
- **F** 6 (M3 x 6) Cord Retention Tray Mounting Screws
- **G** Cable Ties: Qty 30 (NEMA outlet PDU)
  Qty 50 (IEC outlet PDU)
- **H** RJ45 / DB9 Serial Port Connection Cable
- **I** User's Manual, Software Download Card

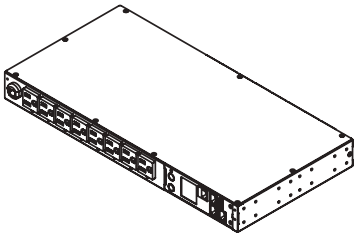

**A**

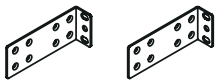

**B**

**C**

**D**

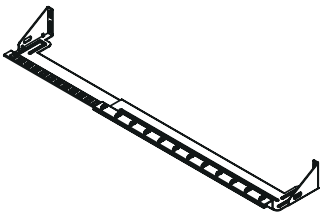

**E**

**F**

**G**

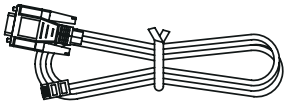

**H**

**The items below are only included with certain models**

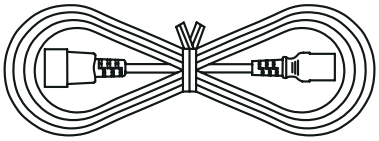

Power Cord 10ft IEC 320 C13/14
PDU81024 / PDU71024 / PDU41024 / PDU31024

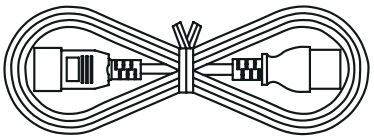

Power Cord 10ft IEC 320 C19/20
PDU81025 / PDU71025 / PDU41025 / PDU31025

Adapter NEMA L5-20R to 5-20P
PDU81022 / PDU71022 / PDU41022 / PDU31022

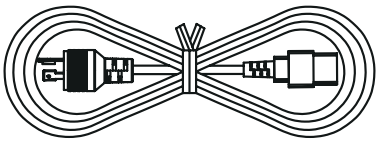

Power Cord 10ft
IEC 320 C19 to NEMA L6-20P
PDU81026 / PDU71026 / PDU41026 / PDU31026

| | |
|---|---|
| **CHECK!** | **Before using, please check to ensure the package contains all the items shown above.**<br>**If there are missing parts, please contact your local CyberPower technical support team for assistance.** |

## PRODUCT FEATURES - 15A MODELS

### Front Panel Description

**NEMA Type**

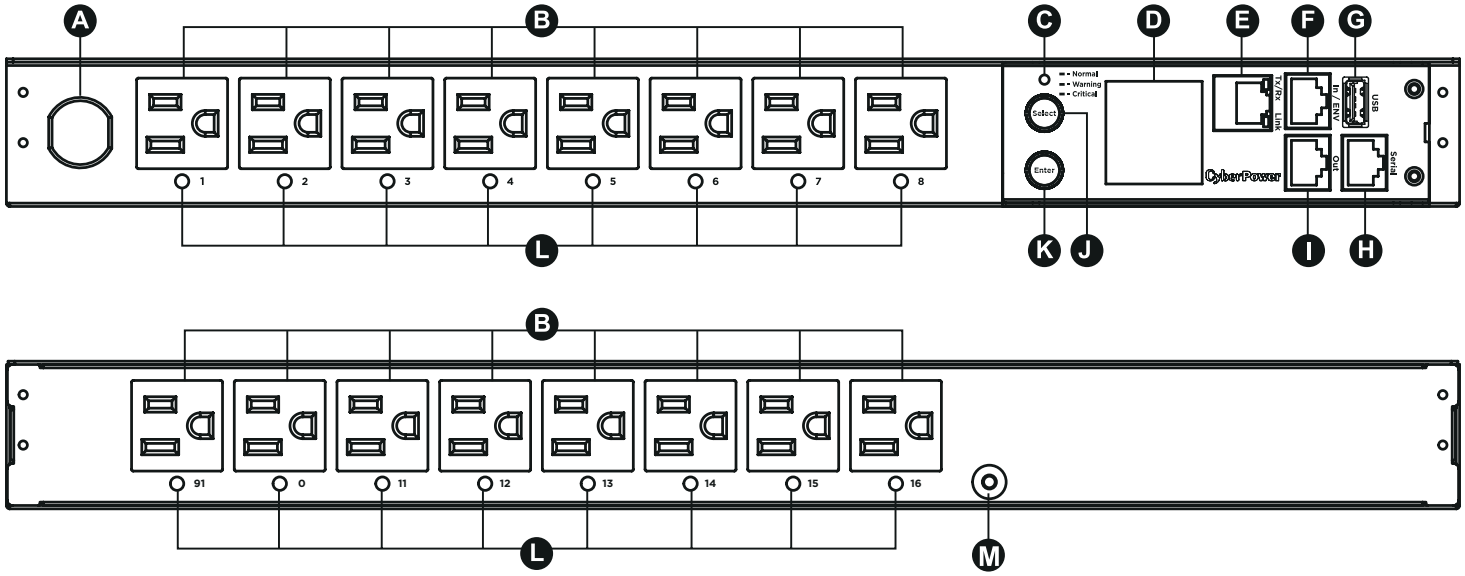


**IEC Type**

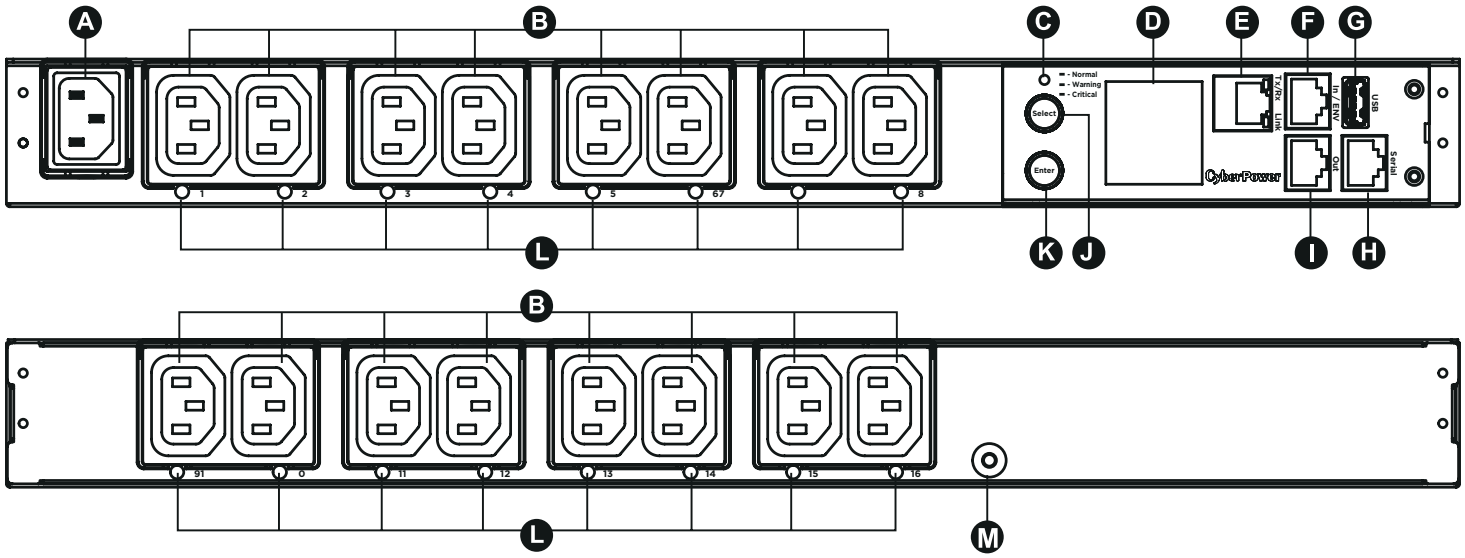


- **A** **AC Inlet/ AC Power Cord -** Used to connect PDU to utility power or UPS.
- **B** **AC Output Receptacles -** Provides power for connected equipment.
- **C** **Status Indicator -** Indicates the condition of the PDU (eg. load or environment status).
- **D** **Multifunction LCD Readout -** Displays various PDU information such as power and load condition.
- **E** **Ethernet Port –** Used to connect PDU to the network.
- **F** **ENVIROSENSOR/ Daisy Chain (In) Port (RJ45 modular port) –** Used for ENVIROSENSOR or chaining to previous PDU.
- **G** **USB Port -** Used to upgrade the firmware via a flash drive.
- **H** **Serial Port (RJ45 modular port) -** Used to connect to a PC and control the PDU locally.
- **I** **Daisy Chain (Out) Port –** Used for chaining to next PDU.
- **J** **Select Button -** Used to control the LCD screen and toggle through the available information options.
- **K** **Enter Button -** Used to choose selected items, enter to next level menu or return to previous menu.
- **L** **Outlet Indicator (switched series only) –** Indicates if the outlet is providing power to connected equipment.
- **M** **Ground Stud –** Used to ground the PDU.

## TECHNICAL SPECIFICATIONS - 15A MODELS

| Model Name | PDU81021<br>PDU71021<br>PDU41021<br>PDU31021 | PDU81024<br>PDU71024<br>PDU41024<br>PDU31024 |
|---|---|---|
| **Input** | | |
| Nominal Voltage | 100 - 120 V | 100 - 240 V |
| Frequency | 50 / 60Hz | |
| Maximum Input Current | 12A UL (Derated) | 10A CE / 12A UL (Derated) |
| Plug Type | NEMA 5-15P | IEC 320 C14 |
| Power Cord Type | SR (14 AWG) | Socket |
| Power Cord Length | 12 ft / 3.65 m | 10 ft / 3.05 m |
| **Output** | | |
| Nominal Voltage | 100 - 120 V | 100 - 240 V |
| Maximum Output Current | 12A UL (Derated) | 10A CE / 12A UL (Derated) |
| Outlet Type | NEMA 5-15R | IEC 320 C13 |
| Outlet Number | 16 | |
| **Management and Communications** | | |
| Multifunction LCD Readout | Voltage, Frequency, Load, Current, HW/FW Version, Network Information | |
| Software | PowerPanel® Business Edition | |
| Networking | Yes | |
| Serial Port | RJ45 | |
| Sensor Capable | Optional | |
| **Physical** | | |
| Dimensions (H x W x D) | 1.75 x 17.05 x 8.45 in. / 44 x 433 x 215 mm | |
| **Environmental** | | |
| Humidity | 0 to 95% Non-condensing | |
| Altitude | 11,483 ft / 3,500 m | |
| Temperature | 32°F to 140° F / 0° C to 60° C | |
| **Safety Approvals** | | |
| Certifications | UL 62368-1 / FCC Class A | UL 62368-1 / CE<br>EN55032 / FCC Class A |

All specifications are subject to change without notice.

## PRODUCT FEATURES - 20A MODELS

### Front Panel Description

### NEMA Type

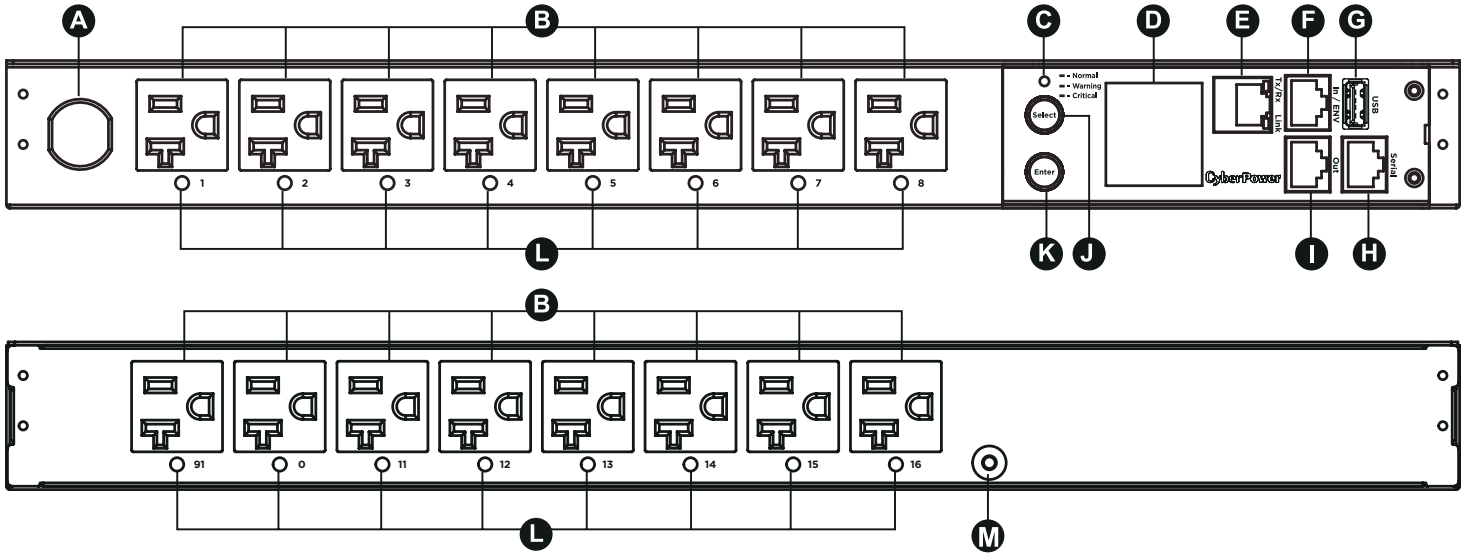


### IEC Type

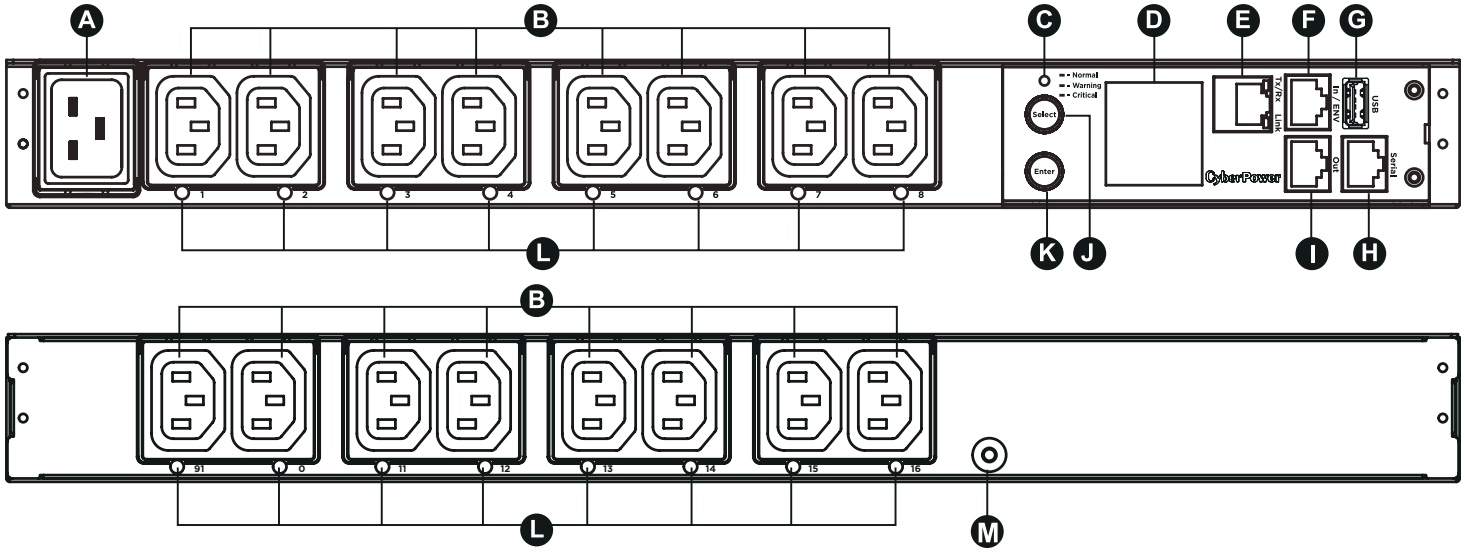


- **A** **AC Inlet/ AC Power Cord -** Used to connect PDU to utility power or UPS.
- **B** **AC Output Receptacles -** Provides power for connected equipment.
- **C** **Status Indicator -** Indicates the condition of the PDU (eg. load or environment status).
- **D** **Multifunction LCD Readout -** Displays various PDU information such as power and load condition.
- **E** **Ethernet Port –** Used to connect PDU to the network.
- **F** **ENVIROSENSOR/ Daisy Chain (In) Port (RJ45 modular port) –** Used for ENVIROSENSOR or chaining to previous PDU.
- **G** **USB Port -** Used to upgrade the firmware via a flash drive.
- **H** **Serial Port (RJ45 modular port) -** Used to connect to a PC and control the PDU locally.
- **I** **Daisy Chain (Out) Port –** Used for chaining to next PDU.
- **J** **Select Button -** Used to control the LCD screen and toggle through the available information options.
- **K** **Enter Button -** Used to choose selected items, enter to next level menu or return to previous menu.
- **L** **Outlet Indicator (switched series only) –** Indicates if the outlet is providing power to connected equipment.
- **M** **Ground Stud –** Used to ground the PDU.

## TECHNICAL SPECIFICATIONS - 20A MODELS

| Model Name | PDU81022<br>PDU71022<br>PDU41022<br>PDU31022 | PDU81025<br>PDU71025<br>PDU41025<br>PDU31025 | PDU81026<br>PDU71026<br>PDU41026<br>PDU31026 | PDU81326<br>PDU71326<br>PDU41326<br>PDU31326 |
|---|---|---|---|---|
| **Input** | | | | |
| Nominal Voltage | 100 - 120 V | 100 - 240 V | | |
| Frequency | 50 / 60Hz | | | |
| Maximum Input Current | 16A CE, UL (Derated) | | | |
| Plug Type | NEMA (L) 5-20P (Adapter) | IEC 320 C20 | NEMA L6-20P | IEC 309 16A |
| Power Cord Type | SR (12 AWG) | Socket | | |
| Power Cord Length | 12 ft / 3.65 m | 10 ft / 3.05 m | 12 ft / 3.65 m | |
| **Output** | | | | |
| Nominal Voltage | 100 - 120 V | 100 - 240 V | | |
| Maximum Output Current | 16A CE, UL (Derated) | | | |
| Number of Banks | 2 | | | |
| Outlet Type | NEMA 5-20R | IEC C13 | | |
| Outlet Number | 16 | | | |
| **Management and Communications** | | | | |
| Multifunction LCD Readout | Voltage, Frequency, Load, Current, HW/FW Version, Network Information | | | |
| Software | PowerPanel® Business Edition | | | |
| Networking | Yes | | | |
| Serial Port | RJ45 | | | |
| Sensor Capable | Optional | | | |
| **Physical** | | | | |
| Dimensions (H x W x D) | 1.75 x 17.05 x 8.45 in. / 44 x 433 x 215 mm | | | |
| **Environmental** | | | | |
| Humidity | 0 to 95% Non-condensing | | | |
| Altitude | 11,483 ft / 3,500 m | | | |
| Temperature | 32°F to 140° F / 0° C to 60° C | | | |
| **Safety Approvals** | | | | |
| Certifications | UL 62368-1, FCC Class A | UL 62368-1, CE, EN55032, FCC Class A | UL 62368-1, FCC Class A | UL 62368-1, CE, EN55032, FCC Class A |

All specifications are subject to change without notice.

## PRODUCT FEATURES - 30A MODELS

### Front Panel Description

**NEMA Type**

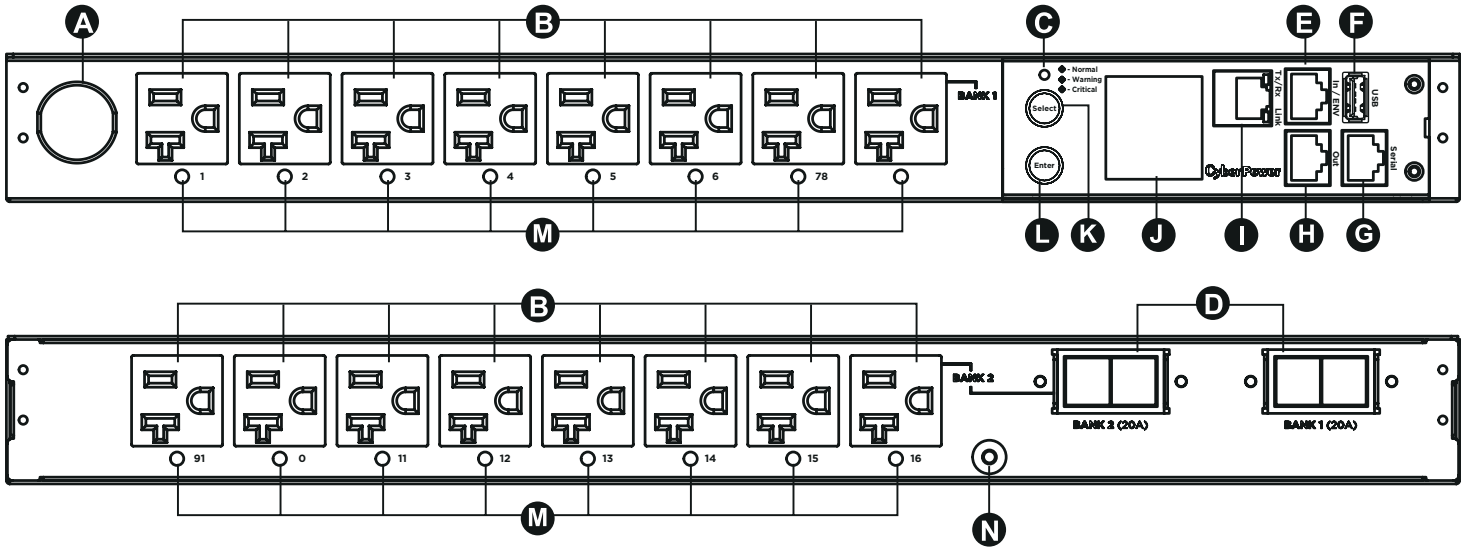


**IEC Type**

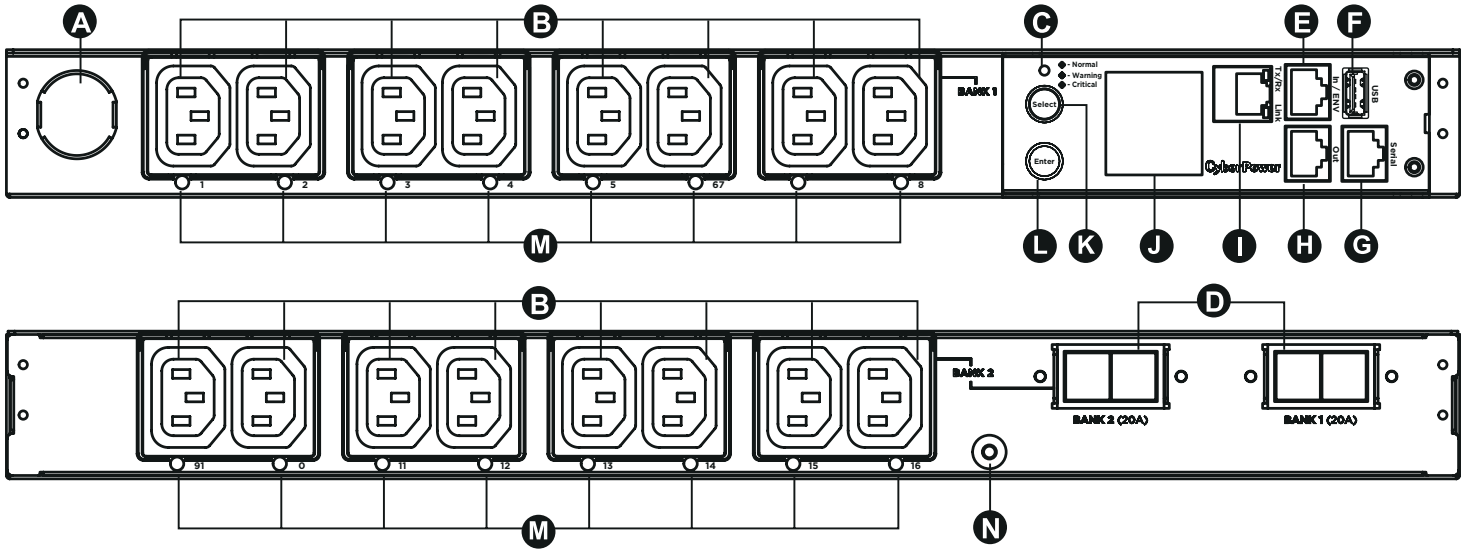


**A** **AC Inlet/ AC Power Cord -** Used to connect PDU to utility power or UPS.

**B** **AC Output Receptacles -** Provides power for connected equipment.

**C** **Status Indicator -** Indicates the condition of the PDU (eg. load or environment status).

**D** **Circuit Breaker –** Provides overload protection.

**E** **Environmental Sensor/ Daisy Chain (In) Port (RJ45 modular port) –** Used for Environmental Sensor or chaining to previous PDU.

**F** **USB Port -** Used to upgrade the firmware via a flash drive.

**G** **Serial Port (RJ45 modular port) -** Used to connect to a PC and control the PDU locally.

**H** **Daisy Chain (Out) Port –** Used for chaining to next PDU.

**I** **Ethernet Port –** Used to connect PDU to the network.

**J** **Multifunction LCD Readout -** Displays various PDU information such as power and load condition.

**K** **Select Button -** Used to control the LCD screen and toggle through the available information options.

**L** **Enter Button -** Used to choose selected items, enter to next level menu or return to previous menu.

**M** **Outlet Indicator (switched series only) –** Indicates if the outlet is providing power to connected equipment.

**N** **Ground Stud –** Used to ground the PDU.

## TECHNICAL SPECIFICATIONS - 30A MODELS

| Model Name | PDU81023<br>PDU71023<br>PDU41023<br>PDU31023 | PDU81027<br>PDU71027<br>PDU41027<br>PDU31027 | PDU81028<br>PDU71028<br>PDU41028<br>PDU31028 | PDU81029<br>PDU71029<br>PDU41029<br>PDU31029 | PDU81030<br>PDU71030<br>PDU41030<br>PDU31030 |
|---|---|---|---|---|---|
| **Input** | | | | | |
| Nominal Voltage | 100 - 120 V | 200 - 240 V | | | |
| Frequency | 50 / 60Hz | | | | |
| Maximum Input Current | 24A UL (Derated) | | | | |
| Plug Type | NEMA L5-30P | NEMA L6-30P | | | |
| Power Cord Type | SR (10 AWG) | | | | |
| Power Cord Length | 12 ft / 3.65 m | | | | |
| **Output** | | | | | |
| Nominal Voltage | 100 - 120 V | 200 - 240 V | | | |
| Maximum Output Current | 24A UL (Derated) / 20A per bank | | | | |
| Number of Banks | 2 | | | | |
| Outlet Type | NEMA 5-20R | IEC C13 | 12 IEC C13/<br>4 IEC C19 | IEC C19 | |
| Number of Outlets | 16 | | 12 + 4 | 10 | 8 |
| Circuit Breaker | Yes | | | | |
| **Management and Communications** | | | | | |
| Multifunction LCD Readout | Voltage, Frequency, Load, Current, HW/FW Version, Network Information | | | | |
| Software | PowerPanel® Business Edition | | | | |
| Networking | Yes | | | | |
| Serial Port | RJ45 | | | | |
| Sensor Capable | Optional | | | | |
| **Physical** | | | | | |
| Dimensions (H x W x D) | 1.75 x 17.05 x 8.45 in. / 44 x 433 x 215 mm | | | | |
| **Environmental** | | | | | |
| Humidity | 0 to 95% Non-condensing | | | | |
| Altitude | 11,480 ft / 3,500 m | | | | |
| Temperature | 32°F to 140° F / 0° C to 60° C | | | | |
| **Safety Approvals** | | | | | |
| Certifications | UL 62368-1 /FCC Class A | | | | |

All specifications are subject to change without notice.

## PRODUCT FEATURES - 32A MODELS

### Front Panel Description

**IEC Type**

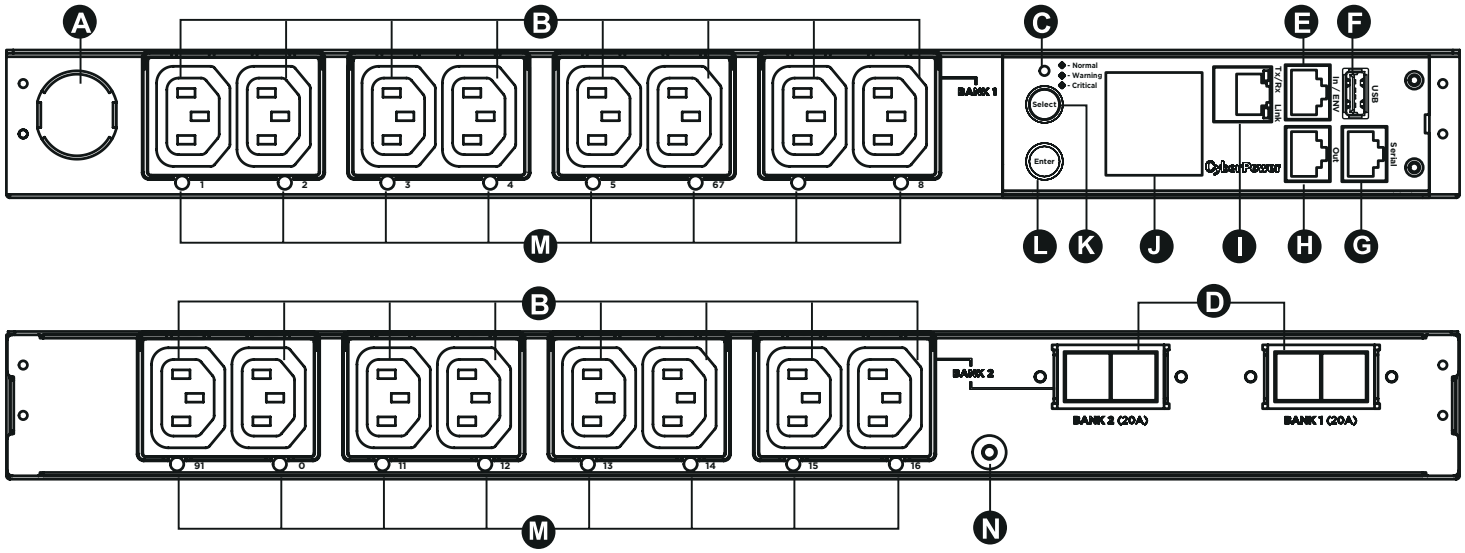


- **A** **AC Inlet/ AC Power Cord -** Used to connect PDU to utility power or UPS.
- **B** **AC Output Receptacles -** Provides power for connected equipment.
- **C** **Status Indicator -** Indicates the condition of the PDU (eg. load or environment status).
- **D** **Circuit Breaker –** Provides overload protection.
- **E** **Environmental Sensor/ Daisy Chain (In) Port (RJ45 modular port) –** Used for Environmental Sensor or chaining to previous PDU.
- **F** **USB Port -** Used to upgrade the firmware via a flash drive.
- **G** **Serial Port (RJ45 modular port) -** Used to connect to a PC and control the PDU locally.
- **H** **Daisy Chain (Out) Port –** Used for chaining to next PDU.
- **I** **Ethernet Port –** Used to connect PDU to the network.
- **J** **Multifunction LCD Readout -** Displays various PDU information such as power and load condition.
- **K** **Select Button -** Used to control the LCD screen and toggle through the available information options.
- **L** **Enter Button -** Used to choose selected items, enter to next level menu or return to previous menu.
- **M** **Outlet Indicator (switched series only) –** Indicates if the outlet is providing power to connected equipment.
- **N** **Ground Stud –** Used to ground the PDU.

## TECHNICAL SPECIFICATIONS - 32A MODELS

| Model Name | PDU81327<br>PDU71327<br>PDU41327<br>PDU31327 | PDU81328<br>PDU71328<br>PDU41328<br>PDU31328 | PDU81329<br>PDU71329<br>PDU41329<br>PDU31329 | PDU81330<br>PDU71330<br>PDU41330<br>PDU31330 |
|---|---|---|---|---|
| **Input** | | | | |
| Nominal Voltage | 200 - 240 V | | | |
| Frequency | 50 / 60Hz | | | |
| Maximum Input Current | 32A CE | | | |
| Plug Type | IEC-309 Blue 230V 32A | | | |
| Power Cord Type | SR (10 AWG) | | | |
| Power Cord Length | 12 ft / 3.65 m | | | |
| **Output** | | | | |
| Nominal Voltage | 200 - 240 V | | | |
| Maximum Output Current | 32A CE / 20A per bank | | | |
| Number of Banks | 2 | | | |
| Outlet Type | IEC C13 | 12 IEC C13/ 4 IEC C19 | IEC C19 | |
| Number of Outlets | 16 | 12 + 4 | 10 | 8 |
| Circuit Breaker | Yes | | | |
| **Management and Communications** | | | | |
| Multifunction LCD Readout | Voltage, Frequency, Load, Current, HW/FW Version, Network Information | | | |
| Software | PowerPanel® Business Edition | | | |
| Networking | Yes | | | |
| Serial Port | RJ45 | | | |
| Sensor Capable | Optional | | | |
| **Physical** | | | | |
| Dimensions (H x W x D) | 1.75 x 17.05 x 8.45 in. / 44 x 433 x 215 mm | | | |
| **Environmental** | | | | |
| Humidity | 0 to 95% Non-condensing | | | |
| Altitude | 11,483 ft / 3,500 m | | | |
| Temperature | 32°F to 131° F / 0° C to 55° C | | | |
| **Safety Approvals** | | | | |
| Certifications | UL 62368-1 / CE / EN55032 / FCC Class A | | | |

All specifications are subject to change without notice.

## Installation - 1U Models

| | |
|---|---|
| CAUTION! | **CAUTION! Please use only the provided screws through the entire installation process.** |

Step 1. Mounting Bracket Installation

Use the provided Mounting Bracket Screws (8) to attach the Mounting Brackets (2) to the PDU.

If you plan on attaching the Cord Retention Tray to the PDU, use the provided Mounting Bracket Screws (8) to attach the mounting brackets (2) to the PDU, as shown below (right).

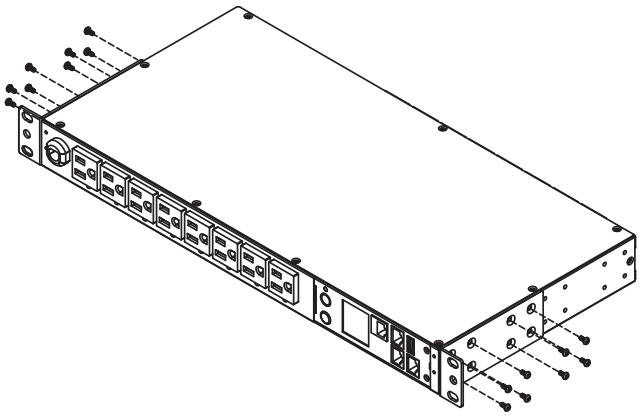

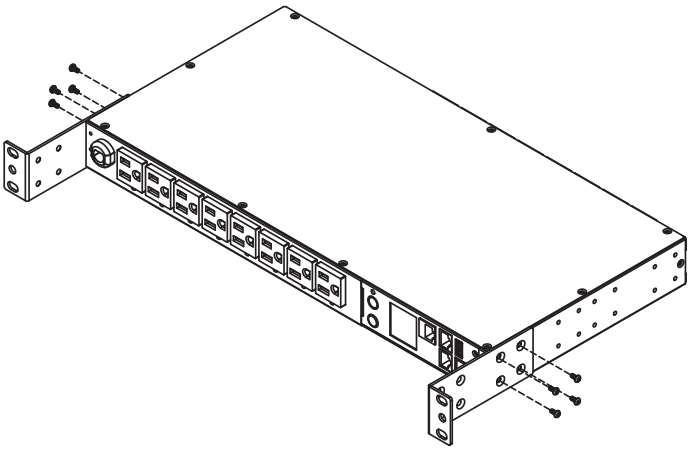

Step 2. Cord Retention Tray Installation (optional)

Adjust the length of the Cord Retention Tray until the screw holes on the Tray align with the screw holes on the rear of the PDU. Attach the Cord Retention Tray to the PDU with the 4 supplied Cord Retention Tray Mounting Screws. Tighten the Cord Retention Tray with the screw on it.

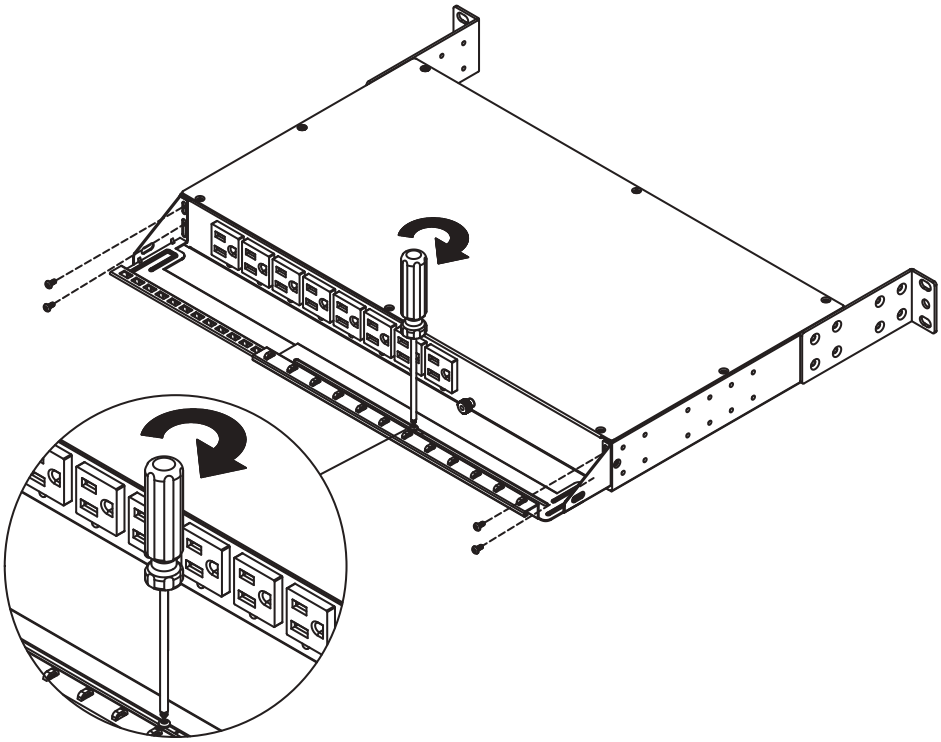

**Installation - 1U Models**

Step 3. PDU Mounting

Use the supplied Washers (4) and Screws (4) to secure the PDU to your existing rack system.

**Note:** You may also use the screw sets provided by the rack to secure the PDU.

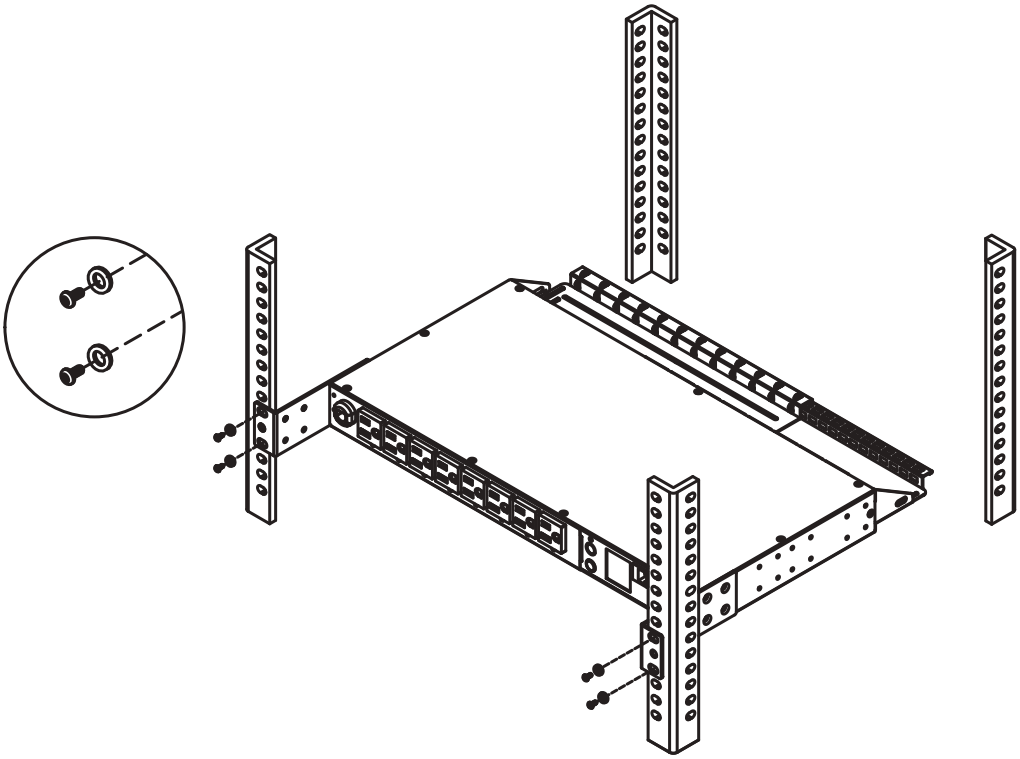

Step 4. Cord Retention Tray Installation (optional)

Adjust the length of the Cord Retention Tray until the screw holes on the tray align with the screw holes on the front of the PDU. Attach the Cord Retention Tray to the PDU using the 4 supplied Cord Retention Tray mounting screws. Finally, tighten the Cord Retention Tray with the screw on it.

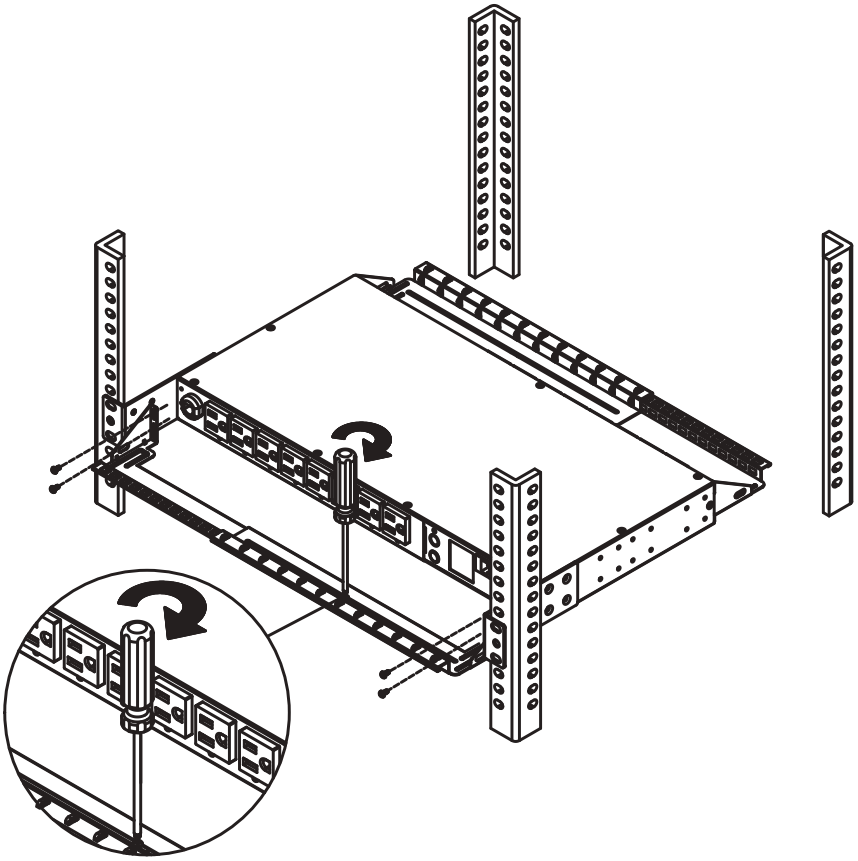

**Installation - 1U Models**

Step 5. Cable Ties (Optional)

Use the provided Cable Ties to fasten each cord to the Cord Retention Tray.
**Note:** If the PDUs are intended to install in a high temperature environment, please use the Power Cords that could sustain high temperature operation.

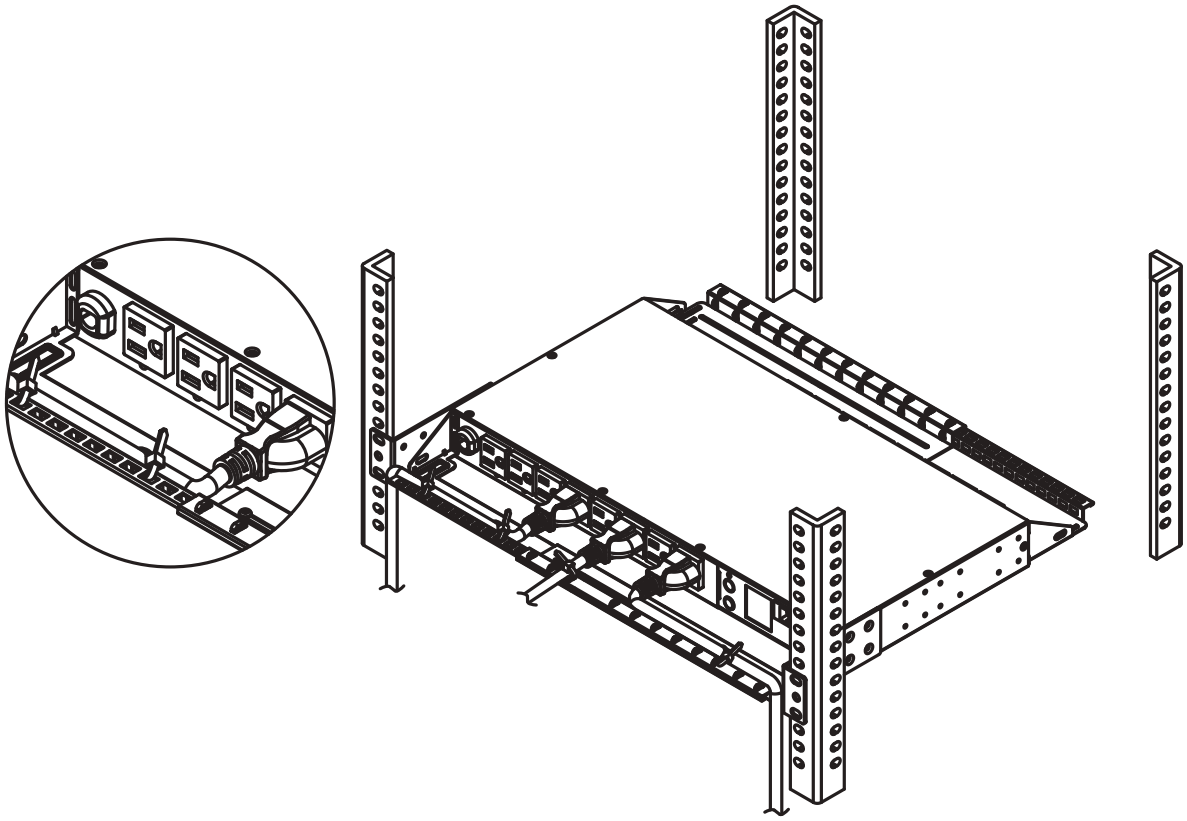

**Locking Power Cord - For IEC Type PDU**

**Input Power Cord**

Step 1. Align and insert the Cable Tie from the upper side of the Fixed Stand and fasten it as shown below.

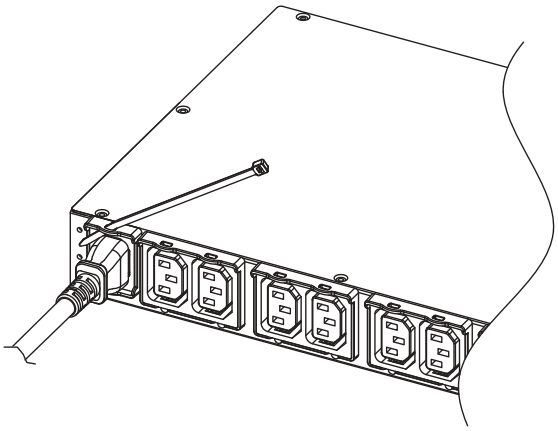

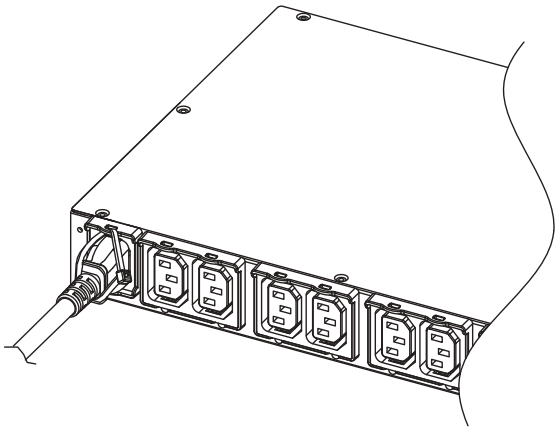

Step 2. Align and insert the Cable Tie from the bottom side of the Fixed Stand and fasten it as shown below.

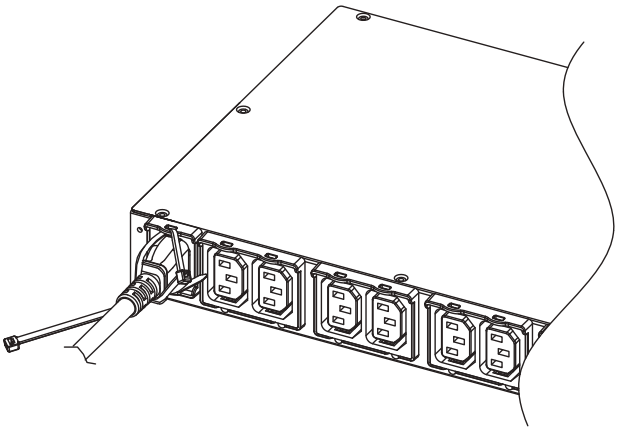

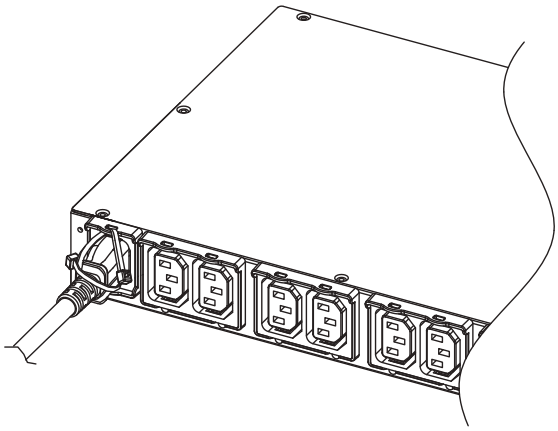

**Output Power Cord**

Step 1. Align and insert the Cable Tie from the upper side of the Fixed Stand and fasten it as shown below.

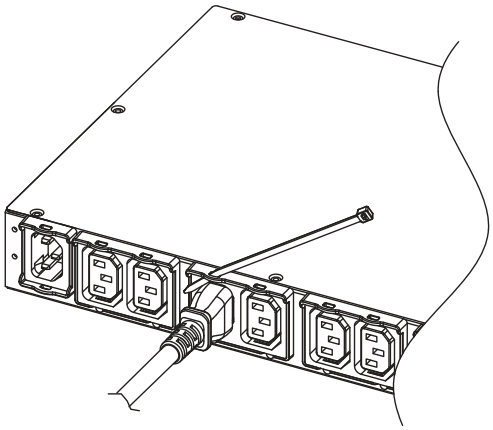

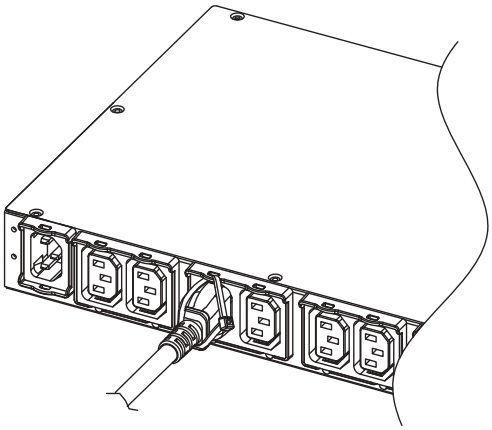

## Electrical Installation

| | |
|---|---|
| CAUTION! | **CAUTION! The PDU must be plugged into a three-wire, grounded wall receptacle only. The wall receptacle must also be connected to an appropriate branch circuit/main with fuse or circuit breaker protection. Connection to any other type of wall receptacle may result in a shock hazard.** |

Step 1. Receptacle evaluation

Ensure that the plug type of your PDU unit matches the wall receptacle type that you are using.

Step 2. Plug the PDU into a CyberPower UPS system (recommended) or the wall receptacle.

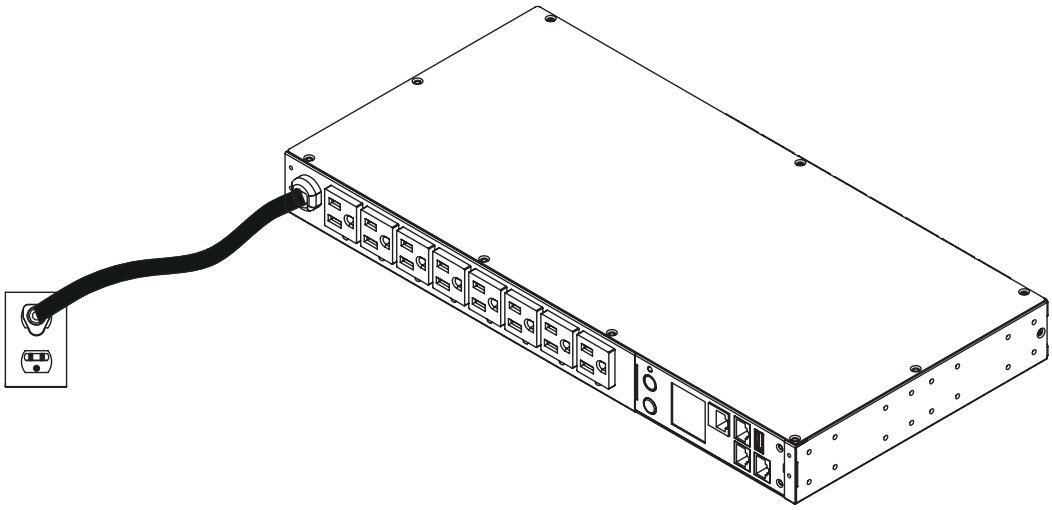

Step 3. Attach equipment

It is extremely important not to exceed the PDUs maximum current load (as outlined in the Specifications section).
In order to determine your total load, use the LCD screen on the front of the PDU to monitor the load being attached.

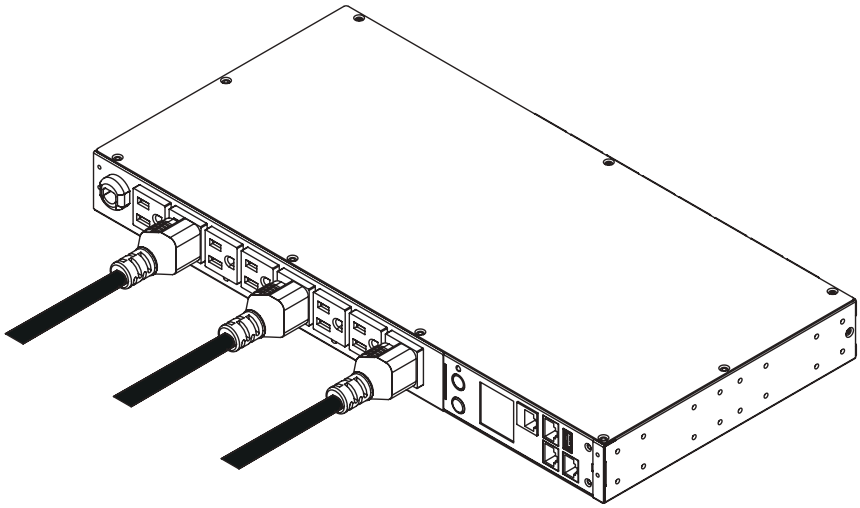

## Network Installation

### Step 1 – Network Connection

Using an Ethernet cable, attach one end to the Ethernet port on the front of the PDU, and the other end to a network port.

### Step 2 – Establish the PDU IP address

Assigning an IP address to the CyberPower PDU requires the user to have an available IP address that is valid on the respective network. If an available IP address is unknown, contact the network administrator to obtain one.

DHCP is enabled by factory default. If the PDU does not receive an IP address from the network's DHCP server, it will default to 192.168.20.177.

There are multiple methods for setting up the IP address on the PDU. Please follow the instructions below for the method that is appropriate for your application. Please make sure the PDU is powered on during this process.

### Option 1: Power Device Network Utility (recommended)

1. Download and install the Power Device Network Utility software from www.cyberpower.com.
2. Open the Power Device Network Utility 2 and select the PDU device from the list. Click "Connection" on the top tools list to start configuring the IP address.
3. Enter the user name and password of the PDU device at the Authentication menu.
4. Configure the IP Address, Subnet Mask, and Gateway Address to match your network settings.

**Note:** The default username is "**cyber**" and the default password is "**cyber**".

### Option 2: DHCP Server

1. Ask your administrator if there is DHCP server on the LAN.
2. Make sure the DHCP is Enabled.
3. Make sure the network connection is ready and power on the PDU.
4. The PDU will obtain an IP address from the DHCP server automatically.

### Option 3: Address Resolution Protocol (ARP) Command

1. Obtain the MAC address from the sticker on the PDU.
2. Open a command prompt as an administrator and type the following:

   "arp -s [available IP address] [MAC address of PDU]".

   Example: IP Address : arp-s 192.168.20.240
   MAC Address: 00-0c-15-80-00-01
3. Use the Ping command to assign a size of 123 bytes to the IP.

   Type in "ping 192.168.20.240 -l 123" then press **Enter**.

   If the replies are received, your computer can communicate with the IP address

### Option 4: Hyper Terminal or Terminal Emulator

1. Use the included RJ45/DB9 serial port connection cable, attach one end to the serial port on the front of the PDU, and the other end to the PC/ server.
2. Open the Hyper Terminal software on your PC and select a name and icon for the connection.
3. Setup the COM port settings using the values indicated in Appendix A.
4. Press **Enter** to enter the Authentication menu.
5. Enter the user name and password of the PDU device at the Authentication menu.
6. Press **2** and **Enter** to access Network Settings to view the IP address.

**Note:** The default username is "**cyber**" and the default password is "**cyber**". For further information and configuration via Hyper Terminal, see Appendix A- Hyper Terminal.

## Remote Management

The remote management function provides monitoring of the PDU operational information, controlling outlets and utilizing SNMP functionality.

### Web

Remote management can be performed via web interface. To access the web interface, please follow the instructions below:

1. Enter the IP address of the PDU into a web browser.
2. Enter the user name and password of the PDU device at the authentication screen.

**Note:** The default username is "**cyber**" and the default password is "**cyber**".

For additional information about the features and functionality of CyberPower Management Console, please refer to the Intelligent PDU Web Interface User's Manual available for download from www.cyberpower.com.

### Telnet and SSH

The CyberPower PDU provides Telnet and Secure Shell (SSH) as Remote Management methods. Telnet uses user name and password as basic security while SSH has a higher security level with encryption of the transmitted packets including user name, password, and data. Configure the Setting of Telnet and SSH on the Web Interface. The default user name and password is **cyber**; **cyber**.

### SNMP

The CyberPower PDU supports SNMPv1 and SNMPv3 protocols. Download the CyberPower MIB file from www.cyberpower.com and add it to an SNMP-supported management software. Default read/write community is **public/private** for SNMPv1. SNMPv3 provides a higher security level than SNMPv1 by encrypting the transmitted packet. Configure the settings of the SNMPv1/SNMPv3 on Web Interface.

## Local Management

### LCD Operation

The LCD screen provides instant information, such as voltage, current and power, for the PDU. In addition, users can use the interface to configure each PDU parameters and control each outlet on the Switched PDU.

**A. Scroll Mode:**

The PDU information will display in following order automatically when "Scroll Mode On" is configured.

| |
|---|
| Device Information |
| Bank 1 Information |
| Bank 2 Information |
| Environment Status<br>(Displays when the Environmental Sensor is connected) |
| Alert |

**B. Main Menu Map**

| | | |
|---|---|---|
| Alert | Current | |
| | Log | |
| Meter | Device | |
| | Bank | |
| | Outlet | |
| Control | Device | Immediate On |
| | | Delay On |
| | Bank 1/2 | Immediate Off |
| | | Delay Off |
| | Outlet 1-N | Reboot |
| | | Delay Reboot |
| Setting | LCD | Color |
| | | Brightness |
| | | Direction |
| | | Screen Off |
| | Reset | Account<br>(User Name and Password) |
| | | Except TCP |
| | | To Default |
| | Reboot | |
| About | Model Name | |
| | Serial Number | |
| | Network | |
| | Daisy Chain<br>(Displays when the PDUs are connected) | |
| | Hardware Version | |
| | Frimware Version | |

### LED Indicators

| Indicator | Status | Description |
|---|---|---|
| Status | Green | OK |
| | Orange | Warning |
| | Red | Critical |
| Tx/Rx | Off | Power Off |
| | On (Green) | Power On |
| | Flashing | Receiving/transmitting data packet |
| | | Reset Finished |
| LINK | On | Indicates the PDU is connected to the LAN |
| | Off | Indicates the PDU is not connected to the LAN |
| Outlet | On (Green) | Outlet On and status OK |
| | Off | Outlet Off |
| | Yellow* | Low Load |
| | Orange* | Near Overload |
| | Red* | Overload |

*For Metered by Outlet Series only.

### Environmental Monitoring (optional)

CyberPower PDUs along with the environmental sensor provide temperature and humidity monitoring in a server closet and/or datacenter remotely. To connect the PDU with environmental sensor, use the RJ45 Ethernet Cable included with the environmental sensor. Plug one end into the Daisy Chain (In)/environmental sensor port on the PDU and the other end into the RJ45 port on the environmental sensor (as shown in figure below). When the PDU correctly connects to the environmental sensor, users can see the temperature and humidity data via the Web Interface. For further information regarding environmental sensor configuration, please refer to the Intelligent PDU Web Interface User's Manual.

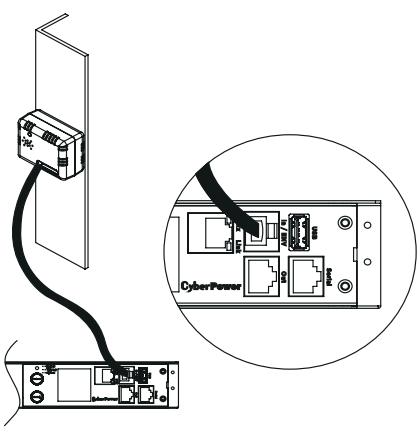

### Device Reset

- To locally reset all the settings to default, use Reset function in the LCD screen.
- To remotely reset all the settings to default, log in to the Web interface, enter the Reset page and apply the function.

### Unattended/Automatic Shutdown

PowerPanel® Business software automatically initiates a graceful shutdown on the connected computer's operating system. PowerPanel must be installed on every computer or server for which the shutdown is to take place. The computer will receive a message from the PDU, and will perform the shutdown according to the instructions provided, including shut downs at exact times and dates.

Step 1. Computer Configuration

1. Install PowerPanel® Business on every computer or server that will be part of the shutdown process (Follow the instructions in the PowerPanel® Business User Manual).
2. Configure the settings in PowerPanel® Business. See the PowerPanel Business® User Manual for detailed instructions.

Step 2. PDU Configuration

Verify that the IP address of all computers that will be part of the shutdown process, are included in the List on the web interface.

Step 3. Notification

Notifying the computers of potential outlet shutdown can be accomplished using the following functions:

- Outlets Control Menu: Performing the task of turning off or rebooting outlets.
- Scheduling Menu: Setting the PDU to perform the task of turning off or rebooting outlets. The notification will occur prior to the scheduled date/time.
- Outlet Overload: In the event of PDU overload, notification will be sent prior to the PDU shutting down.

## Firmware Upgrade

By upgrading the Firmware, you can obtain new features and updates/improvements to existing functionality. To ensure the firmware is kept up to date, please regularly visit our website to see if there is any updated firmware version available. There are three methods for upgrading the PDU firmware. Please follow the instructions below for the method that is appropriate for your application. There are two files to update in order to upgrade the firmware version:

- cpsmpdumadata_XXX.bin
- cpsmpdumafw_XXX.bin

Note that the XXX is not part of the file name but is where the version number in the filename is given.

Prior to performing a firmware update, please:

- Download the latest firmware from www.cyberpower.com.
- Extract the downloaded firmware file to your local "C:\" drive.

**Note:**

1. The FTP service needs to be enabled before attempting to execute a firmware upgrade.
2. Please do not turn the PDU off when performing the firmware upgrade. PDU outlets will remain powered on while the firmware update takes place. Only the PDU LCD screen will reboot.
3. The PDU LCD screen will reboot during the firmware update process. This DOES NOT cause the PDU outlets to reboot.

### Option 1: Single Device Upgrade

Use the following steps to upgrade the firmware.

1. Open a command prompt window and navigate to "C:\".
2. Login to the PDU with FTP command, type
   - C:\>ftp
   - ftp> open 192.168.22.126 21
   (for example: 192.168.22.126 is the current IP of the PDU and 21 is the default ftp port for the PDU)
   - Connected to 192.168.22.126.
   - 220 CyberPower FTP Server Ready.
   - User (192.168.22.126:(none)):cyber
   - 331 User name okay, need password.
   - Password:
   - 230 User logged in, proceed.
   - ftp>
3. Upload the cpsmpdumadata_XXX.bin, type
   - ftp > bin
   - ftp > cpsmpdumadata_XXX.bin
4. Upgrade complete, type
   - ftp > quit
5. The system will reboot after you type "quit". This reboot will take approximately 30 seconds.
6. Login to the PDU via FTP again, type
   - C:\>ftp
   - ftp> open 192.168.22.126 21
   (for example: 192.168.22.126 is the current IP of the PDU and 21 is the default ftp port for the PDU)
   - Connected to 192.168.22.126.
   - 220 CyberPower FTP Server Ready.
   - User (192.168.22.126:(none)):cyber
   - 331 User name okay, need password.
   - Password:
   - 230 User logged in, proceed.
   - ftp>
7. Upload cpsmpdumafw_XXX.bin, type
   - ftp > bin
   - ftp > put cpsmpdumafw_XXX.bin
8. Upgrade complete, type
   - ftp > quit
9. The system will reboot after you type "quit".

### Option 2: Single or Multiple Device Upgrade (recommended)

Use the following steps to upgrade the firmware.

1. Install the CyberPower Power Device Network Utility 2 available for download at www.CyberPower.com.
2. After installation completes, run the "Power Device Network Utility 2".
3. The main window of the Power Device Network Utility 2 program is shown in Figure 1. The configuration tool will display all CyberPower Remote Management devices present on the local network subnet. The "Scan" button is used to search the local network subnet again.

Figure 1

## Firmware Upgrade

4. Check the boxes to select the devices you wish to upgrade, and click “Connection” on the top tools list to enter the device user account and password (shown in Figure 2). Once the connection is confirmed, the status icon next to the IP Address will change from grey to green. **Note:** You must connect to the device by entering user account and password credentials before firmware upgrades.

Figure 2

5. Select the devices you wish to upgrade by checking their respective checkbox and select “Upload Firmware”. **Note:** You can upload the firmware of multiple devices that use the same firmware files.

6. Select the Firmware and Data files and click “OK” to implement firmware upgrade, as shown in Figure 3.

Figure 3

7. Once the firmware upgrade is implemented, you will see the Result in the main window, as shown in Figure 4.

Figure 4

**Note:** If you don’t want to wait for the firmware upgrade, you can stop action by choosing **Abort** in the **Action** menu. However, it’s not recommended because **Abort** action may cause the device to malfunction.

**Option 3: Use a USB Flash Drive**

Use the following steps to upgrade the firmware.

1. Download the latest firmware from www.cyberpower.com.
2. Extract the file to the root directory of a USB flash drive with **FAT32 format**. Please note that the two files below should be available in order to complete the firmware upgrade process:
   - cpsmpdumadata_xxx.bin
   - cpsmpdumafw_xxx.bin
3. Plug the USB drive into the PDU USB port and press **Enter** button on the PDU LCD screen to enter **Main Menu**. The USB option will be displayed.

4. Select **USB** and press **Enter** button to enter **Firmware Upgrade** menu.

5. Select **Main** and **Yes** to start the upgrade process.

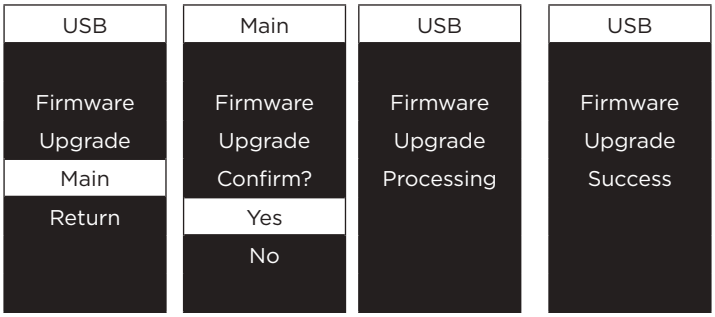


6. The PDU will reboot after the process is completed.

**Note:** You can check to see if the firmware upgrade is successful by checking the “Firmware version” on the [System->About] screen via web UI. You can also check Firmware Version on LCD screen. Press Enter on the LCD screen to enter Main menu. Select About and press Enter to see the PDU information. Select Firmware Version to check the PDU Firmware Version.

## OPERATION

### Firmware Upgrade

**Option 4: Use Secure Copy (SCP) command**

Use the following steps to update the firmware via SCP.

**Note:** Only firmware version 1.10 and above supports the functionality to update firmware via SCP.

**For Windows Users:**

1. Download any PuTTY Secure Copy client (PSCP) utility.
2. Save the firmware files and the PSCP Utility in the same folder.
3. Open the Command Line Interface and change the path to where the firmware files and the PSCP Utility are saved.
4. Enter the following command to perform the firmware update:
   pscp –scp <filename> <user>@<IP address of PDU>:

**Note:**

(1) The SSH setting on the PDU must be Enabled.

(2) <filename> is the filename of the firmware file. There are two firmware files to upload: cpsmpdumadata_XXX. bin and cpsmpdumafw_XXX.bin. In order to upgrade the firmware version both files need to be uploaded.
Only one firmware file can be uploaded at a time, it is recommended to upload the data file cpsmpdumadata_XXX.bin first followed by the firmware file cpsmpdumafw_XXX.bin.

(3) <user> is the username of the SSH account on the PDU.

(4) Ensure to add ":" after the IP address.

5. After executing the command, a message may appear asking if you trust the host. To continue type "y" for yes within 10 seconds.
6. On the next screen enter the PDU password. Please wait until the progress indicator displays 100%. The system will automatically log out and reboot after the transfer is complete.
7. Repeat steps 4 through step 6 to upload the firmware file cpsmpdumafw_XXX.bin to complete the firmware update process.
8. If the firmware file transfer is unsuccessful you will see an error message. Attempt to retype the command and execute it again.

**For Linux, MacOS and Unix Users:**

1. Install the related distribution of an SSH or SCP client, for example Openssh client.
2. Open the Terminal and change the path to where the firmware files are saved.
3. Enter the following command to perform the firmware update:
   - pscp –scp <filename> <user>@<IP address of PDU>:

**Note:**

(1) The SSH setting on the PDU must be Enabled.

(2) <filename> is the filename of the firmware file. There are two firmware files to upload: cpsmpdumadata_XXX. bin and cpsmpdumafw_XXX.bin. In order to upgrade the firmware version both files need to be uploaded. Only one firmware file can be uploaded at a time, it is recommended to upload the data file cpsmpdumadata_XXX.bin first followed by the firmware file cpsmpdumafw_XXX.bin.

(3) <user> is the username of the SSH account on the PDU.

(4) Ensure to add ":" after the IP address.

For example:
scp cpsmpdumafw_XXX.bin cyber@192.168.1.100:

**Note:** cpsmpdumafw_XXX.bin is the firmware file of the version being updated.

4. After executing the command, a message may appear asking if you trust the host. To continue type "y" for yes within 10 seconds.
5. On the next screen enter the PDU password. Please wait until the progress indicator displays 100%. The system will automatically log out and reboot after the transfer is complete.
6. Repeat steps 3 through step 5 to upload the firmware file cpsmpdumafw_XXX.bin to complete the firmware update process.
7. If the firmware file transfer is unsuccessful you will see an error message. Attempt to retype the command and execute it again.

## TROUBLESHOOTING

| Problem | Possible Cause | Solution |
|---|---|---|
| PDU outlets do not provide power to connected equipment | 1. Breaker tripped<br>2. Power cord is not properly plugged in | Reset Breaker, check the plug to insure its connected correctly. If the problem remains, contact technical support. |
| Amperage displayed on LCD screen exceeds the units capability | Overload | The load indicator shows red when overload. Reduce the load on the PDU until the overload is gone. If the problem remains, contact technical support. |
| Circuit breakers have tripped | 1. Sustained overload<br>2. Excessive ambient or internal temperatures<br>3. Faulty breaker | Reset Breaker.<br>If the problem remains, contact technical support. |

## CONFORMANCE APPROVALS

### FCC Warning

This device complies with part 15 of the FCC rules. Operation is subject to the following two conditions:

(1) this device may not cause harmful interference, and (2) this device must accept any interference received, including interference that may cause undesired operation. Note: This equipment has been tested and found to comply with the limits for a Class B digital device, pursuant to part 15 of the FCC Rules. These limits are designed to provide reasonable protection against harmful interference in a residential installation. This equipment generates, uses, and can radiate radio frequency energy and, if not installed and used in accordance with the instructions, may cause harmful interference to radio communications. However, there is no guarantee that interference will not occur in a particular installation. If this equipment does cause harmful interference to radio or television reception, which can be determined by turning the equipment of and on, the user is encouraged to try to correct the interference by one or more of the following measures:

- Reorient or relocate the receiving antenna.
- Increase the separation between the equipment and receiver.
- Connect the equipment to an outlet on a circuit different from that to which the receiver is connected.
- Consult the dealer or an experienced radio/TV technician for help. Warning: Changes or modifications not expressly approved by the party responsible for compliance could void the user's authority to operate the equipment.

Canadian Compliance Statement

CAN ICES-3 (A)/NMB-3(A)

### European Union

This is a class A product. In a domestic environment this product may cause radio interference in which case the user may be required to take adequate measures.

## CUSTOMER SERVICE

### Product Registration

Thank you for purchasing a CyberPower product. Prompt product registration entitles coverage under the Limited Warranty and also allows the opportunity to be notified of product enhancements, upgrades, and other announcements.

Registration is quick and easy at www.cyberpowersystems.com/registration (for USA and Canada) or www.cyberpower.com/registration (for all other regions).

### Cyber Power International

Feel free to contact our Tech Support department with installation, troubleshooting, or general product questions.

**Cyber Power Systems, Inc.**
www.cyberpower.com

Europe, Northern Ireland
**Cyber Power Systems B.V.**

Flight Forum 3545, 5657DW Eindhoven, The Netherlands
Tel: +31 40 2348170 Fax: +31 40 2340314
Email: eu.service@cyberpower.com

Austria, Germany, Switzerland
**Cyber Power Systems GmbH**
Edisonstrasse 16, 85716 Unterschleissheim, Germany
Telefon: +49 89 1 222 166 0 Fax: +49 89 1 222 166 29
Email: de.service@cyberpower.com

France
**Nitram S.A.**

Z.I. Saint-Séverin, B.P. 36, 28220 CLOYES, FRANCE
Tél : +33 2 37 98 61 50 Fax: +33 2 37 98 60 04
E-mail: infos@nitram.fr

United States, Canada
**Cyber Power Systems (USA), Inc.**
4241 12th Avenue East, Suite 400, Shakopee, MN 55379
Toll-free: +1 877 297 6937 Email: sales@cpsww.com

Taiwan, United Kingdom
**Cyber Power Systems, Inc.**
11F., No.26, Jinzhuang Rd., Neihu Dist.,
Taipei City 114, Taiwan
Tel: +886 2 8792 9510 Fax: +886 2 8792 9621
Email: tw.service@cyberpower.com,
uk.service@cyberpower.com

All Other Regions
Please visit our website for local contact information.

## LIMITED WARRANTY AND CONNECTED EQUIPMENT GUARANTEE

Please visit www.CyberPowerSystems.com for a copy of the Limited Warranty and Connected Equipment Guarantee.

**Where Can I Get More Information?**
The application of the United Nations Convention of Contracts for the International Sale of Goods is expressly excluded. CyberPower is the warrantor under this Limited Warranty.

For further information please feel free to contact CyberPower at:
Cyber Power Systems (USA), Inc.
4241 12th Ave E., STE 400, Shakopee, MN 55379;
Call us at **(877) 297-6937**;
or submit a web ticket online at **cyberpowersystems.com/support**.

**WARNING:** This product can expose you to chemicals including bisphenol A (BPA) and styrene, which is known to the State of California to cause reproductive harm and cancer. For more information, go to www.P65Warnings.ca.gov.

## APPENDIX A - HYPER TERMINAL

Hyper Terminal software can be used for basic PDU configuration. In order for Hyper Terminal to interact with the PDU, the PC/server must be connected directly to the PDU via the serial port with the included RJ45/DB9 serial port connection cable. It utilizes a textbased interface and menu system. Navigation through the interface is done by typing the number of the menu option and pressing the Enter key. Setup the COM port settings using the following values.

- Bits per second: 9600
- Data bits: 8
- Parity: None
- Stop bits: 1
- Flow control: None

**Note:** The session will timeout and logout after 3 minutes of inactivity. Menu options are shown below:

**[Main Menu]**

1. Outlet Manager (Switched PDU Series Only)
2. Network Settings
3. System Configuration
4. Account Settings
5. Configure System to Default
6. Logout

**[Outlet Manager]**

1. Outlet Control
2. Outlet Configuration

**[Network Setting]**

Physical MAC Address: 00-0C-15-40-08-A9

1. System IP: 192.168.24.20
2. Subnet Mask: 255.255.255.0
3. Default Gateway: 192.168.24.254
4. DHCP: Enabled
5. Http Port: 80
6. Http Access: Enabled

**[System Configuration]**

1. Date (mm/dd/yyyy) : 11/11/2011
2. Time (hh:mm:ss): 17:17:25
3. Name:PDU41002
4. Contact: Administrator
5. Location: Server Room

**[Account Setting]**

1. Administrator
2. Viewer (Web Only)

**[Configure System to Default]**

Sure to Configure System to Default

1. Yes
2. No

## APPENDIX B - POWER DEVICE NETWORK UTILITY 2

### Overview

The CyberPower Power Device Network Utility 2 is an easy-to-use interface which is used for establishing IP addresses on CyberPower PDU devices.

### Installation

Step 1. Download the Power Device Network Utility 2 software from www.cyberpower.com.

Step 2. Select **Next** in the software wizard (Figure 1).

Figure 1

Step 3. Choose an installation directory. Select **Next** (Figure 2).

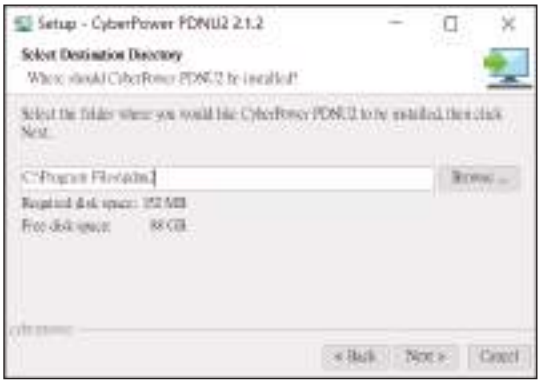


Figure 2

Step 4. Select **Next** to confirm the settings and install (Figure 3).

Figure 3

Step 5. Select **Finish** to finalize the installation (Figure 4).

Figure 4

### Launch Program

To launch the Power Device Network Utility 2 and get started, select Programs from the Start menu in Windows and locate the new folder and icons for Power Device Network Utility 2. Select Power Device Network Utility 2 from the program folder.

**Getting Started**

The Power Device Network Utility 2 scans the network for devices with MAC addresses that match CyberPower network hardware. Once found, the device(s) can then be figured with a specific IP address, subnet mask, and gateway address. This allows the device(s) to function properly on the network and interface with CyberPower Management Console.

Step 1. Select the appropriate PDU device from the Equipment List (Figure 5).

Figure 5. Equipment List

**Note:** If the PDU does not appear on the list, click the **Refresh** button to rescan the network. If it still does not appear, ensure that the PDU is turned on and was installed correctly. Pressing **Stop** will cancel the scan/refresh process.

Step 2. Authentication

Enter the user name and password of the PDU device at the Authentication menu (Shown in Figure 6).

**Note:** The default username is "**cyber**" and the default password is "**cyber**".

Figure 6. Authentication Menu

Step 3. Assign a valid IP Address to the PDU

With the appropriate device selected from the Equipment List, open the Device Network Settings menu by clicking on the tool button. In the Device Network Setting Menu, enter a valid IP address, subnet mask, and gateway address to setup the PDU device. (Shown in Figure 7)

**Note:** The DHCP option is not available for all power devices.

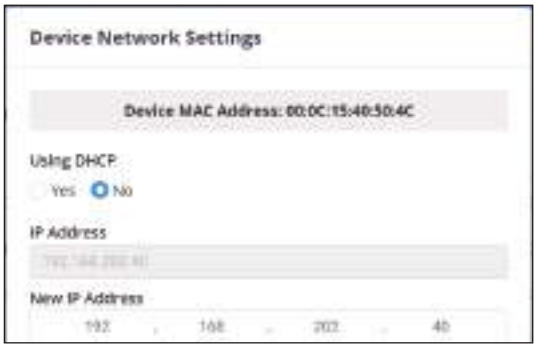


Figure 7. Device Network Settings

## APPENDIX C - PDU DAISY-CHAIN FUNCTION

The daisy-chain function allows up to four PDUs to be connected together to be monitored and controlled from one IP address.

When PDUs are connected, two roles are defined: Host and Guest. Up to three Guest PDUs can be connected to one Host PDU. The Guest PDUs will be recognized by serial number and their order within the daisy-chain.

**Note:** To perform the daisy-chain function, the firmware version of the connected PDUs needs to be the same (v1.08 or above).

### How to connect the PDUs together?

Use one Ethernet cable and connect one end of it to the daisychain (Out) port on the Host PDU and the other end to the daisychain (In/ENV) port on the Guest 1 PDU to connect the PDUs (as shown below).

**Note:** Make sure to use straight through cables to perform the daisy-chain function.

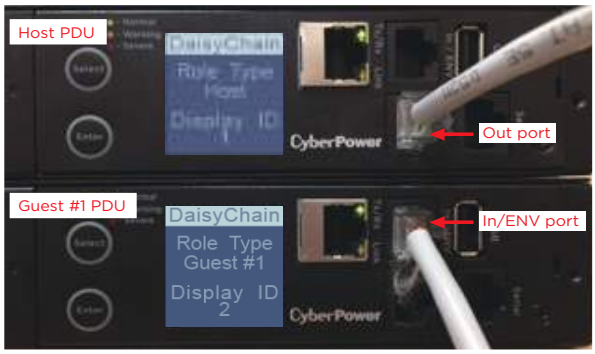


### What remote management protocols are supported in PDU daisy-chains?

Currently, users can monitor and control daisy-chained PDUs through Web interface (HTTP/HTTPS) or SNMP protocols.

### What functions on the web pages does daisy-chain support?

Find in the table below.

| Summary | |
|---|---|
| PDU | Device Status |
| | Outlet Status |
| | Device Manager |
| | Outlet Manager |
| | Outlet Control |
| | Outlet Schedule |
| Log | Status Records |
| | Energy Records |
| | Graphing |
| System | Identification |

### How to switch between Host and Guest PDUs on the Web interface?

Functionality supported by daisy-chained PDUs will have the Host/Guest # drop down menu displayed on the Web interface (as shown below).

### Can I upgrade the firmware version of the Guest PDUs through the Host PDU?

Yes, you can upgrade the firmware using the Upgrade and Configuration Utility, FTP (network connection required), or USB port. Once the Hostcompletes the PDU firmware upgrade, it will trigger its Guest PDUs to upgrade the firmware automatically. It takes about 5 minutes for the Guest PDUs to upgrade, regardless of the number of PDUs in the series.

## APPENDIX C - PDU DAISY-CHAIN FUNCTION

**What will happen if an Ethernet cable is disconnected in the PDU daisy-chain?**

For example, if four PDUs are connected and the cable connecting Guest 1 and 2 is disconnected, then Guest 2 and 3 will no longer be detected by the Host PDU. An event showing that Guest 2 and 3 are removed will be recorded in the Host PDU. Meanwhile, Guest 2 and 3 will create a new daisy-chain where Guest 2 becomes a Host and Guest 3 becomes Guest 1 to the new Host.

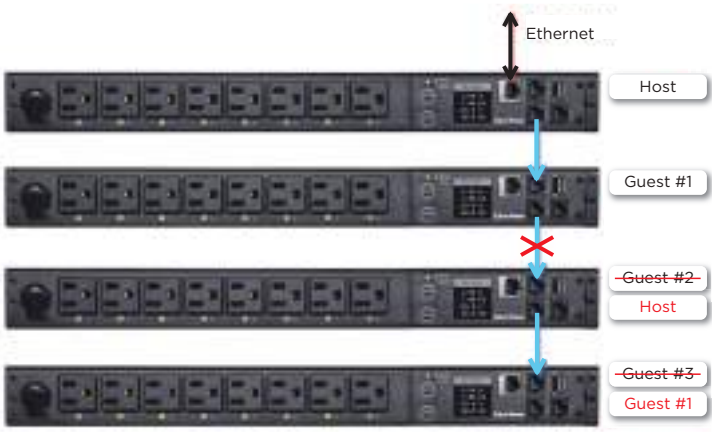


**In the above example, if the disconnected Ethernet cable is re-connected, will the role of the PDUs stay the same?**

Yes, when the disconnected cable between Guest 1 and 2 is re-connected, Guest 2 and 3 will revert to their previous roles.

**What happens if one PDU in the daisy-chain is powered off?**

For example, if four PDUs are connected and Guest 1 is powered off, an event showing that Guest 1, 2 and 3 are removed will be recorded in the Host PDU. Guest 2 and 3 will not create another daisy-chain.

**Does the Host PDU record the logs of the Guest PDUs and itself?**

Yes, the Host PDU records the logs from all Guest PDUs daisy-chained to it.

**Will the Logs of the Guest PDUs recorded in the Host PDU be cleared if the Guest PDUs are removed from the Host PDU?**

No, the Logs of the Guest PDUs will remain even after the Guest PDUs are removed.

**Does the Host PDU record the Status Records of the Guest PDUs and itself?**

Yes, the Host PDU records the Status Records for all the PDUs in the daisy-chain.

**Will the Status Records of the Guest PDUs logged in the Host PDU be cleared if the Guest PDUs are disconnected from the Host PDU?**

Yes, once the Guest PDUs are removed, the Status Records logged in the Host PDU will be cleared. As long as the Host PDU does not connect to other PDUs, the Status Records of the disconnected PDU can be displayed when it is re-connected to the Host PDU. If the Host PDU connects to dierent PDUs, the Status Records of the removed PDU will be entirely cleared.

**Are the Guest PDUs able to connect to the network when they are daisy-chained?**

Yes, even when the PDUs are daisy-chained, the Guest PDUs are able to connect to the network directly. Note that a Guest PDU will require having its own Ethernet cable connected to the network.

**What will happen if a 5th PDU is added to a daisy-chain?**

The maximum number of PDUs that can be connected in one daisy-chain is 4. The daisy-chain functionality will not work until the fifth PDU is removed.

**What is the maximum recommended length of the Ethernet cable to daisy-chain the PDUs?**

50 ft (15 m)

## TROUBLESHOOTING

| Problem | Possible Cause | Solution |
|---|---|---|
| The PDUs are connected but the daisy-chain function is not working. | 1. The firmware version does not support daisy-chain.<br>2. The PDUs have different firmware versions. | Check the firmware version of each PDU and upgrade it to v1.08 or above. |
| I cannot set the EnergyWise configuration on a Guest PDU. | Only the Host PDU supports EnergyWise. | N/A |
| I cannot set the WoL for Guest PDUs. | Only the Host PDU supports WoL. | N/A |

## Appendix D - RJ45/ DB9 Serial Port Connection Cable Pinout

Pinout of RJ45 plug and DB9 socket provided in package are shown below.

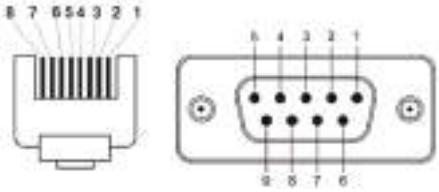


RJ45 Plug (Male) DB9 Socket (Female)

©2025 Cyber Power Systems (USA), Inc. CyberPower is a registered trademark and brand of Cyber Power Systems (USA), Inc. All rights reserved. All other trademarks are the property of their respective owners. CyberPower reserves the right to change, without notice, marketing programs, product offerings and specifications. **www.cyberpowersystems.com**