AV02CLD-200

2MP Outdoor Vandal Dome

1080p (2.1-Megapixel) Resolution
Remote Focus/Zoom Motorized 2.7–13.5mm F1.4 P-Iris Lens
Day and night (ICR)
True wide dynamic range (WDR)
NDAA Compliant

On-Camera Analytics
Easily Adjustable 3-Axis Gimbal
IK10 / IP66
PoE (IEEE 802.3af Class 3), 12V DC
Two-way audio

PoE (IEEE 802.3af Class 3), 12V DC
IR LED (25m / 82 ft (4ea))
Supports ONVIF

SPECIFICATIONS

Camera Imaging Specifications	
Image Sensor	1080p (2.1MP) CMOS Progressive Sensor
Optical Format	1/2.8"
Minimum Illumination	(Color (Day Mode)) 0.04 Lux (B/W (Night Mode)) 0.005 Lux
Full FOV Resolution	1920 H x 1080 V
Scaling	Yes
IR Illumination	82ft (25m) max
Dynamic Range	120dB DOL WDR
Frame Rates	(Multi-Stream) (WDR Off) Up to 60fps (1080p) + 60fps (1080p) + 30fps (360p) (Multi-Stream) (WDR On) Up to 30fps (1080p) + 30fps (1080p) + 30fps (360p)
Lens	(Motorized Lens) 2.7–13.5mm, F1.4, H-FOV = 28°–100°, V-FOV = 16°–54°
Programmability	
Optics	Remote focus, remote zoom
Low-Light Performance	NightView™ technology Smart IR
Programmable Shutter Speed	Auto/manual 0.1ms ~ 500ms
Motion Detection	Real-time, 1024 detection zones
Privacy Masking	Unlimited
Backlight Compensation	Auto
White Balance Mode	Auto/manual
Gain Control	Auto
Flicker Control	5Hz–255Hz adjustable
Image Rotation	CorridorView™ (90°, 180°, and 270° image rotation) + mirror
Scaling	(1080p) 1920x1080, 1280x720, 960x540, 640x480, 640x360 (5MP) 2592x1944, 2048x1536, 1920x1080, 1296x972, 1280x720, 960x540, 640x480, 640x360
Wide Dynamic Range	Adjustment between WDR and LDR modes
Efficiency	SNAPstream+™ (Smart Noise Adaptation and Processing) Bit rate and bandwidth limitation control
Miscellaneous	Programmable brightness, contrast, sharpness, saturation, hue
Password	16-digit ASCII character password
On-Screen Display (OSD)	Time/date/camera name/custom text
Standard Video Analytics	Motion Detection Camera Tamper Intrusion Detection Line Crossing Loitering
Optional Advanced Video Analytics	Object Classification (Person/Vehicle) Object Left/Removed People/Vehicle Counting
Data Transmission	
Compression Type	H.265/H.264 (MPEG-4, Part 10)/Motion JPEG
Bit Rate Control	64K–8000K
Smart Codec	Smart GOP
Transmission Protocols	SNMP, HTTP, HTTPS, IPv6, IPv4, SSL, TCP/IP, TLS 1.2, UPnP, UDP, RTCP, RTSP, RTP, SMTP, NTP, DHCP, FTP, 802.1x, QoS, DDNS, Zero Configure 10/100Base-T Ethernet network interface, RJ45
Multi-Streaming	2 x H.265/H.264 stream, 1 x M-JPEG stream
Users	Live viewing/Administrator for up to 10 clients
Event Management	
Event Trigger	Motion detection, tampering detection, alarm in
Notifications	Send/record message via e-mail/FTP/NAS/SD card, record JPG/mp4
Compliance	
Industry Standard	ONVIF Profile S, G, M, T conformant
Listings	UL (CB) UL60950-1, E489591
FCC Compliance	47 CFR 15 Class A
Environmental	RoHS, REACH, WEEE
Markings	(CE): EN55032 Class A, EN55024, EN61000-3-2, EN61000-3-3, EN60950
Mechanical	IK-10 (EN62262), IP66 (EN60529)
Environmental	
Operating Temperature	(1080p) -20°C (-4°F) to +50°C (122°F) (5MP) -40°C (-40°F) to +50°C (122°F)
Humidity	0% to 90% (non-condensing)
Storage Temperature	-40°C (-40°F) to +60°C (140°F)
General Electrical	
Alarm Input/Output	1 input (wet contact)/1 output (wet contact)
Power Over Ethernet	PoE IEEE 802.3af, Class 3 Total PoE solution (no external power requirement)
Auxiliary Power	12V DC
Power Consumption	(1080p) 8.5W max (5MP) 10W max
IR Illuminator	
LEDs	4pcs, Smart IR
Projection Distance	82ft (25m) max
Audio Electrical	
Streaming	Two-way
Compression	G.711 PCM 8 kHz/8 bit
Input/Output	Line in / Line output
Mechanical	
Casing	Die-cast aluminum chassis with polycarbonate dome bubble IP66 weather proof standard Impact resistant, IK-10 rated
Gimbal	Easy 3-axis camera adjustment with 355° pan, and 60° tilt, and 180° Z-rotation
Dimensions	(Unit) Ø 5.55" (141mm) x 4.09" H (104mm) (Packaged) 5.9" H (150mm) x 6.7" W (170mm) x 7.28" L (185mm)
Weight	(Unit) 2.09lbs (0.95kg) (Packaged) 2.16lbs (0.98kg)
On Board Storage	MicroSDXC slot up to 1TB (card not included)
Body Color	AV Costar White (Pantone® Cool Gray 1C)

PRODUCT IMAGE

DIMENSIONS
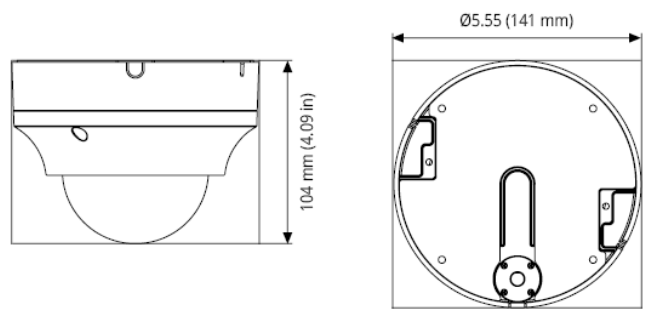
Unit - mm (inch)