REVISIONS					
REV	ZONE	MARK	DESCRIPTION	DATE	CHANGED

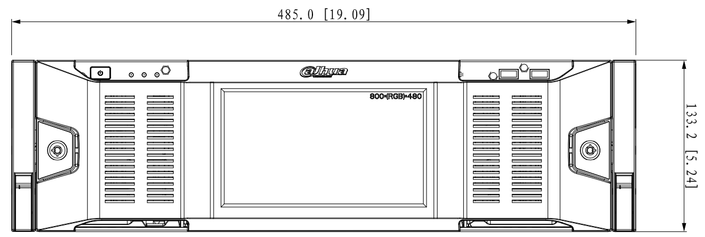

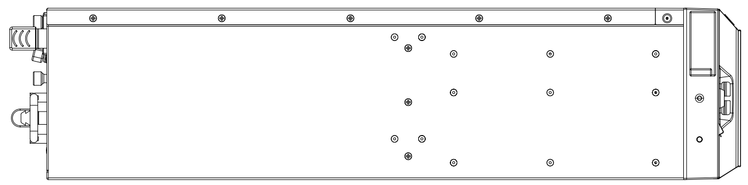

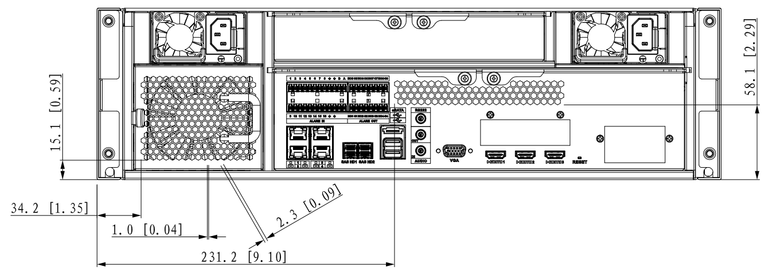

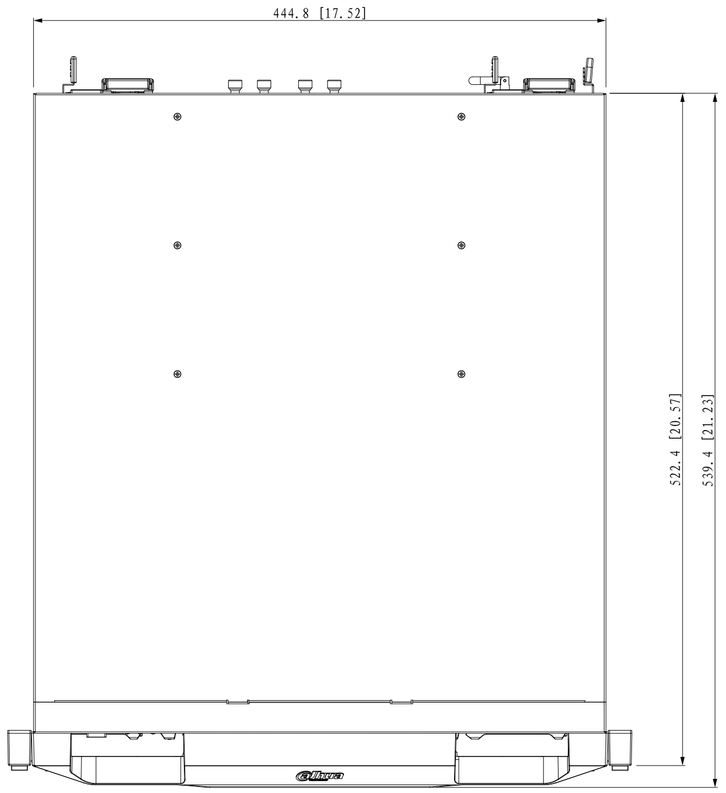

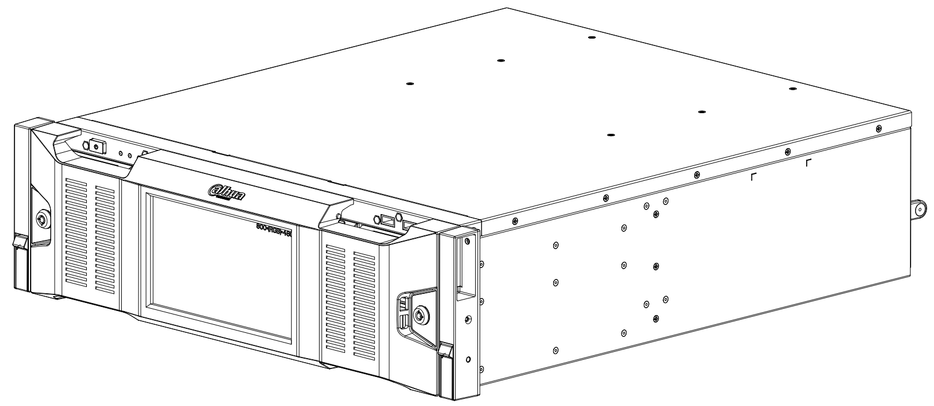

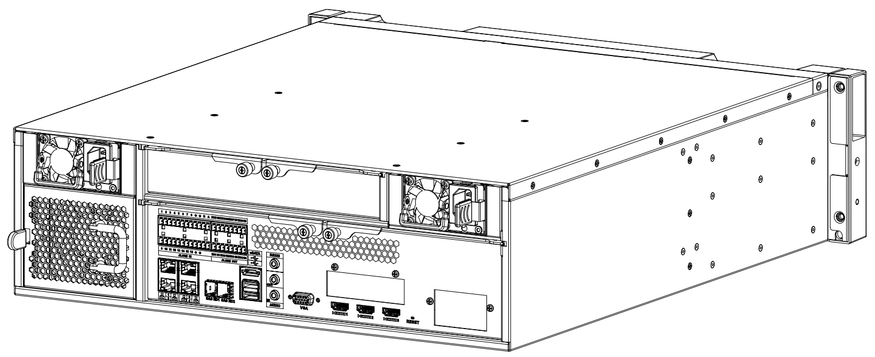

.X	±0.2					TITLE:	SKL-3U整机
.XX	±0.15						
.XXX	±0.05	ANG	±0.5	DRAW:	DATE:	UNIT'S: mm	DWG NO.: 0-DH3-0512-0001
THESE DRAWINGS AND SPECIFICATION ARE THE PROPERTY OF ZHEJIANG DAHUA TECHNOLOGY CO., LTD. AND SHALL NOT BE REPRODUCED COPYIED OR USED IN ANY MANNER WITHOUT THE PRIOR WRITTEN CONSENT OF ZHEJIANG DAHUA TECHNOLOGY Co., LTD.				CHKD:	DATE:	SCALE: 1:1	
				STAD:	DATE:	REV:	MASS(g): 22614013 SHEET NO.:
				APPD:	DATE:	SHEET: 2 OF 2	

RELEASE LEVEL: &PROJ_RELEASE
FILE NAME: 0-DH3-0512-0001